Archaeological Surveys at Yassıhöyük

Masako OMURA
Ankara

Japanese Institute of Anatolian Archaeology (JIAA) of the Middle Eastern Culture Center in Japan conducted a preliminary survey at the mound site of Yassıhöyük, Turkey, from August 13 to 31, 2007, in preparation for future excavations.

The survey members were as follows: Dr. Masako Omura as the director (JIAA), Dr. Sachihiro Omura (JIAA), Dr. Kimiyoshi Matsumura (JIAA), Kazuhiro Kumagai (Tsukuba University), Takayuki Oshima as photographer. The General Director of Monuments and Museums of the Turkish Ministry of Culture and Tourism assigned Ms. Binnur Karadağ as a representative of the Ministry.

The purposes of the survey in 2007 were to record the condition and the size of the site, and to identify the places where architectural remains exist. The distribution of pottery shards on the surface was also considered in order to plan for the excavation to take place in future years. Work in 2007 included the following:

1) Photography of the site on the ground and from the air
2) Construction of a topographic map of the site
3) Geomagnetic survey on the top of the mound
4) Surface artifact collection

1. GENERAL SURVEYS AND EXCAVATIONS IN KIRŞEHIR AND YASSIHÖYÜK

Yassıhöyük is in Kırşehir Province located in the central part of the Republic of Turkey. Kırşehir has common boundaries with Ankara in the northeast, Kırkkale in the north, Yozgat in the northwest, Nevşehir in the southeast and Niğde in the south. The province is east of the Kızılırmak river, or in the western part of Central Anatolia, which is surrounded by the curve of the Kızılırmak.

U. Bahadır Alkım (Alkım 1956, pp.62-68, 81-88) and Sachihiro Omura (Mikami and Omura 1991, pp.62-63) have summarized the descriptions of Kırşehir by 17th- to 19th-century travelers, beginning with Ch. Texier (Texier 1839), and have reported on the archaeological surveys and excavations of the 20th century. Full-scale archaeological surveys in Central Anatolia began with that of the University of Chicago directed by H. H. Von der Osten in 1926–1929. He conducted the survey in Kırşehir after work in İstanbul-Bursa-Eskişehir in 1926 (Von der Osten 1929). Following Osten, K. Bittel in 1931 (Bittel 1967), Bossert and Alkım in 1950 (Bossert 1957) and Meriggi in 1964 conducted surveys in Central Anatolia, including the Kırşehir region. As for Yassıhöyük, Meriggi briefly mentioned it (Meriggi 1966, p.106, 109, Pl.XXXIX/Fig. 75).

20 years after Meriggi's survey, Japanese Institute of Anatolian Archaeology has conducted general surveys in Central Anatolia since 1986, recording Yassıhöyük in 1986, 1988, 2000 and 2002 (Mikami and Omura 1987, p.126, res.16, 17, 37, 53/8-13; Omura 2001, p.43, Figs. 81 and 82; 2003b, p.53, Figs. 119-125). The surveys have been conducted in parallel with the excavation of Kaman-Kalehöyük[1)] by a Japanese team directed by S. Omura since 1986 (*AAS* I (1992)-XVII (2008)). These two investigations are closely connected with each other as they aim to establish a new chronology of Central Anatolia and to understand the spread of the cultures of the region. Research at Yassıhöyük uses the chronology established at Kaman-Kalehöyük as the ordinate axis.

[1)] Kaman-Kalehöyük was reported as "Chihirgan euyuk" by Chantre in 1893 and as a "large hüyük near Ghaman" by Von der Osten in 1926 (1929, pp.145, 147, Fig. 226).

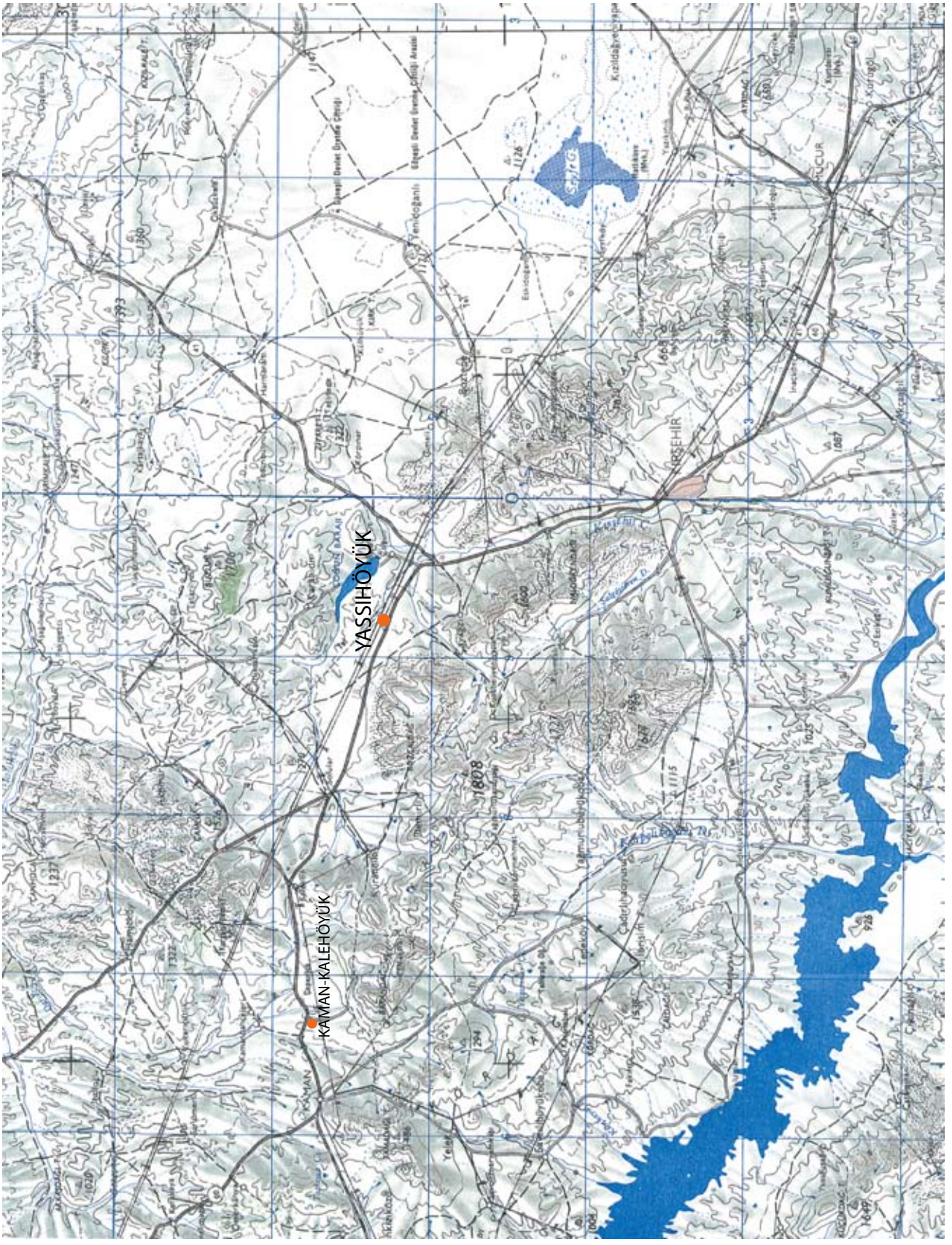

Fig. 1 Map of Yassıhöyük and environments

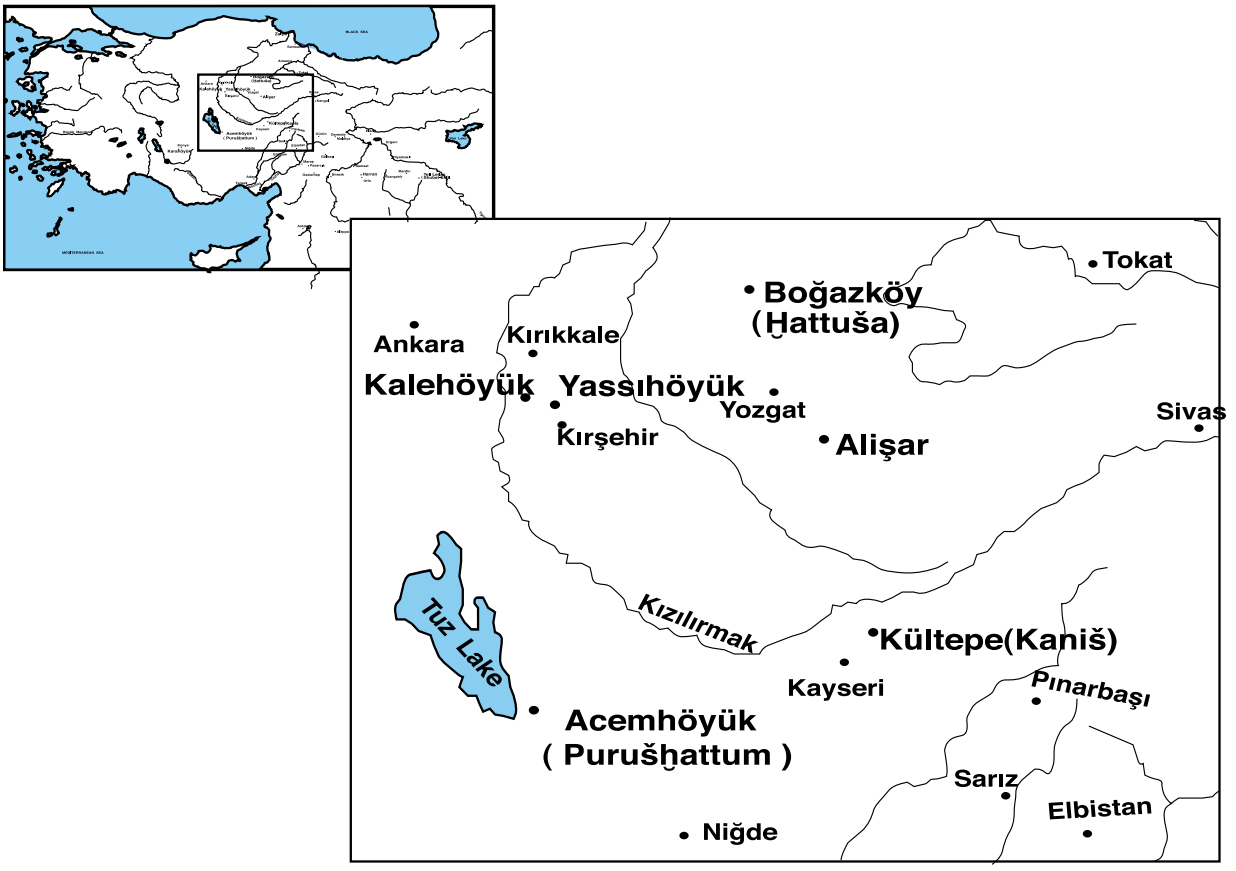

Fig. 1a

2. LOCATION OF YASSIHÖYÜK

2.1. Location

Yassıhöyük is located on the northern edge of National Route 260 which connects Ankara and Kayseri. It is 160 km southeast of Ankara, 25 km north of Kırşehir, and about 30 km east of Kaman-Kalehöyük. It is situated at lat. 39°19'18" N and long. 34°04'29" E (Fig. 1). Besides the surveys of Meriggi and S. Omura, V. Sevin mentioned Cemele Yassıhöyük[2] as the *Zama* or *Sama* listed by Ptolemaeus among the towns in the area of Khamanene extending from west to east along the northern side of the Halys (Kızılırmak) valley (Sevin 1998, pp.44-61, p.55). Some philologists said that in the Old Assyrian period there was a city called *Durhumit* near Kaman and on the east bank of Kızılırmak (J. G. Derckson 1996, p. 14; K. R. Veenhof and J. Eidem 2008, map). We think Yassıhöyük is one of the possible sites to be *Durhumit*, if it is true that the city was in this area.

2.2. Geology of the Yassıhöyük area

As the aerial photos show, Yassıhöyük is surrounded by agricultural fields of wheat and barley. Yassıhöyük itself is also cultivated (Colour 2, Fig. 2).

The valley including Yassıhöyük is geologically identical with a geographical formation of the Cenozoic era called the Kızılırmak formation which spreads all over Kırşehir Province. This formation narrows in the area along National Route 260 from Soflar to Kırşehir. Yassıhöyük is located at the middle of this narrow band.

The Kızılırmak formation is dated to the Upper Miocene or Pliocene epoch, that is, 23.8 million to 5.3 million or to 1.8 million years ago.

In the north of the Kızılırmak formation, an intrusive called Çayağiz Buzlukdağ Syenitoid-Barandağ Granitoid-Karahıdır Volcanic Member is exposed. This dates to the Campanian-Santonian age of the Late Cretaceous Period; the Cretaceous Period dates

[2] Çayağız Municipality was called Cemele village until 1985.

to 146 to 65 million years ago. Surrounding these formations, the oldest rock units in Kırşehir, part of the metamorphic Kırşehir Massif, are exposed. These include the Kalkanlıdağ, Kervansaraydağ, Bozçaldağ and Hacıselimli formations. These are Paleozoic formations, dating to 543 to 248 million years ago.

The stones found on the surface at Yassıhöyük and in the surrounding area, such as granite, gabbro, diorite, syenite, rhyolite, limestone, sandstone and mudstone, must originate from nearby sources (MTA 1990; 1991; Naruse 1994, pp.55-65; Naruse *et al*. 1997, pp.143-147). Some of the stones are prepared artificially and others are not.

3. THE SHAPE OF YASSIHÖYÜK

3.1. Photography (Colour 2-3, Figs. 2-6)

Photography was conducted both on the ground and from the air to understand the shape of the site.

On the ground, the photos were taken from the northern hills of the site and from İdrizviran Tepe across National Route 260 south of the site. A helium-filled balloon loaded with a remote control camera took the photos from the air. These show the line of the city wall that encloses the mound; the wall appears to be well preserved around three quarters of the mound (Colour 2, Fig. 2). At the southeast slope is the large area of destruction said to have been dug out when the National Route 260 was constructed.

The photos taken on the ground from the northwest show that one road climbs up to the center of the mound cutting the northeast part of the city wall (Colour 3, Figs. 3-4). It seems that this road was a main road of the ancient city, which passed through the city gate and continued to the city center.

3.2. Topographic survey

The topographic survey was conducted to make a base map to capture the size, shape and location of

Fig. 2 Yassıhöyük from the air

Fig. 3 Yassıhöyük from the northeast

Fig. 6 Yassıhöyük from the east

Fig. 4 Yassıhöyük from the north

Fig. 5 Yassıhöyük from the south

Yassıhöyük (Fig. 7). According to the 1/25,000 scale map published by General Command of Mapping of Turkish General Staff, Yassıhöyük is located at lat. 39°19'18" N and long. 34°04'29" E, 1147 m above sea level. To carry out the topographic survey, a basic control point GB1 (1,139.832m) was placed at the highest spot inside the city wall.

3.3 Establishing the grid system

On the topographic map a grid system was set up which will be the foundation of the excavation grids. The grid system of Yassıhöyük is based on a dual structure.

i. Large grids: covering a 1.5 km^2 area centering on the mound with meshes of 100m x 100m and numbering the ordinate from south to north A to I and the abscissas west to east 1 to 13, to coordinate the grids. The grid at the southwest corner is called A1 and one at the northeast corner is I13.

ii. Small grids: each large grid contains 400 small grids of 5m x 5m, numbering the ordinate from south to north a to t and abscissas west to east 1 to 20, so that the grid at the southwest corner is A1/a1 and the grid at the northeast corner is I13/t20.

3.4. The shape of Yassıhöyük

Yassıhöyük is a flat and wide mound, as reflected in its name (Yassı means flat.) (Figs. 3, 5). The dimensions of the mound are 500 m north-south, 625 m east-west, and 13 m high. The west skirt of the mound was destroyed by the road which connects National Route 260 to the town of Karahıdır. The destruction on the southeast slope made a cut 70 m wide from the top of the mound to the base, destroying the city wall; on the cut sections, the remains of walls and pottery shards are exposed. A great quantity of various types and sizes of stones are scattered all over the site, which seem to have

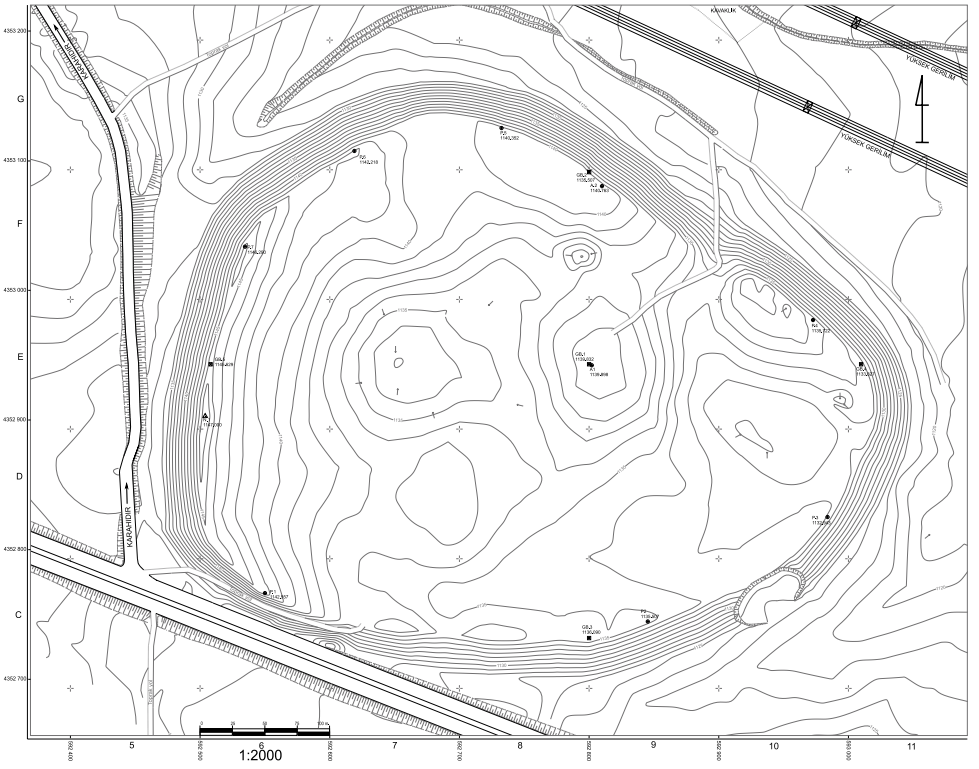

Fig. 7 Topographic map of Yassıhöyük

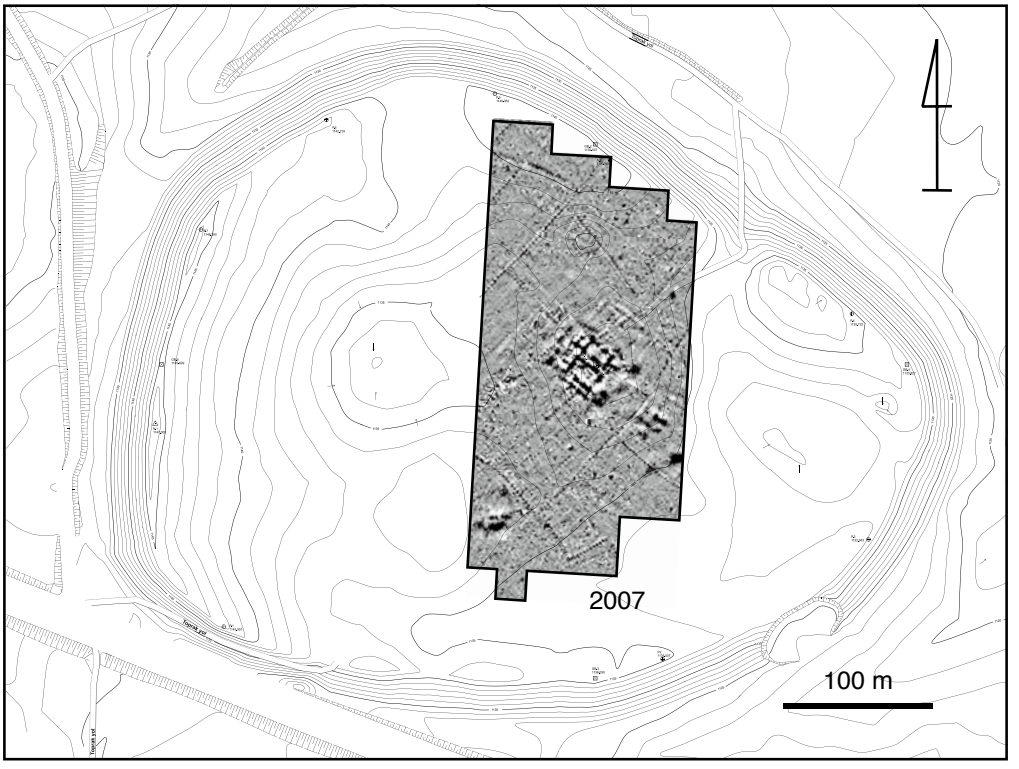

Fig. 8 The result of Geomagnetic survey

originally been part of the city wall and buildings.

The topographic map shows two areas of high relief on the top of the mound surrounded by the city wall: along the farm road cutting the city wall, one of them appears in the center of the mound and on the southwest extended line of this road, there is the other one. On each side of the farm road at the edge of the top of the mound where it interrupts the city wall, there are higher places. The city wall at these higher parts are observed to be remained more vertical and higher than any other parts (Fig. 6).

The topographical survey reminds us that a large city might have flourished on this site in ancient times.

4. SUPPOSED CULTURES

4.1. Geomagnetic survey

The geomagnetic survey was conducted in 2007 on the highest area of the mound and on the east side of the mound (Fig. 8). Architectural remains were discovered, including a building as large as 40m x 50m, and other buildings related to the large one, toward the southeast. In the second higher area southwest of the highest area, the corner of another large building and some related rectangular constructions are indicated. But these buildings seem to be deeper than those in the highest area, and their plans are not clear.

The details of the geomagnetic survey at Yassıhöyük are described by K. Kumagai in this volume of *AAS* (2008, pp.171-174).

4.2. Plan of the building observed by the geomagnetic survey

The main building observed with the geomagnetic survey appears to have a northwest-southeast principal axis and is 50 m long by 40 m wide. There are two larger rooms symmetrically in the center of the building and some smaller rooms around them, which are surrounded by a gallery. In the southeast part of the building, an opening that seems to be an entrance is observed. Although the plan of this building is somewhat similar to that of Sarıkayasarayı of Acemhöyük (Özgüç, N. 1980, pp. 87-88, Pl. 1-2), we have not found any other similar examples among the ancient palaces or temples reported in Anatolia so far. However, its size indicates that it was for public use, perhaps a palace or a temple.

4.3. Surface collections

As part of the annual regional surveys conducted by JIAA, surface artifacts have been collected on and around the mound at Yassıhöyük at four different times – in 1986, 1988, 2000 and 2002. After the geomagnetic survey in 2007, JIAA again collected surface remains in the area where the buildings were detected. This report discusses the surface finds collected in 2007 together with those from the previous four surveys, which have also been published in the annual survey reports (Mikami and Omura 1987, p.126, res.16, 17, 37, 53/8-13; Omura 2001, p.43, Figs. 81, 82; 2003b, p.53, Figs. 119-125).

Most of the surface collection at Yassıhöyük is pottery shards and only 28 small finds are observed.

4.3.1. Small finds

28 small finds (two in 2000, five in 2002 and 21 in 2007) include loomweights (07000001, 07000002) (Fig. 9), earthen spindles (070000019–070000021), earthen discs with a hole (07000007–07000009), earthen

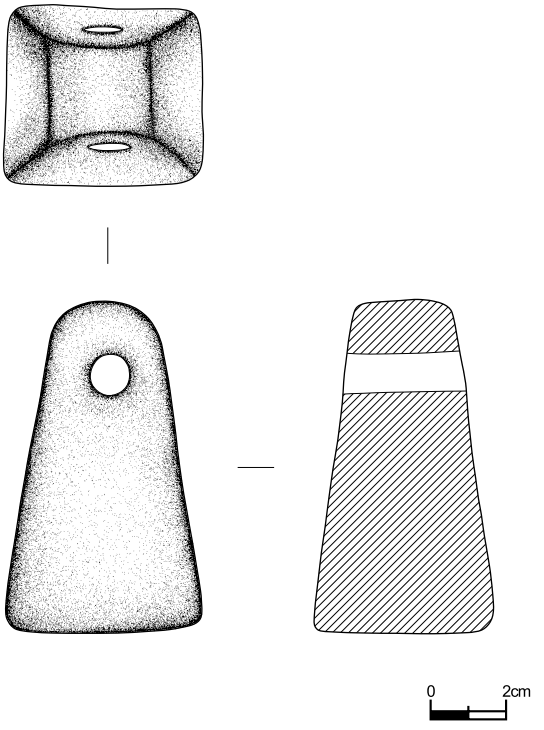

Fig. 9 Loomweight 07000001

crescent-shape weights (86000002, 02000001) (Fig. 10), a stone ax (02000002) (Fig. 11), whetstones (07000012–07000014) (Fig. 12), obsidian blades (07000015, 00000001), beads (07000004–07000006) and a bronze arrowhead (07000010) (Figs. 13-14). Of these small finds, the earthen crescent-shape weights and the bronze arrowhead can be dated as follows:

The bronze arrowhead (07000010) was found at the northern side of the large building found with the geomagnetic survey. It is a two-winged arrowhead with a rhomb-shaped blade section and with a socket. The stem is comparatively long and the tail is almost lost. The same type of arrowheads were found in Stratum IIa at Kaman-Kalehöyük. According to K. Yukishima, this is a type of early Scythian arrowhead known widely in the Near East and the Caucasus, dated to the second half of the 7th century B.C., or around 600 B.C. (1992, pp.91-93, Fig.1; 1998, pp.183-204).

Earthen crescent-shaped weights were found in 1986 and 2002 (86000002, 02000001). On weight 86000002, a very faded impression of stamp seal is found (Fig. 10). This type of weights were found in Stratum IIIb – Old Hittite Period – at Kaman-Kalehöyük and also in the same period at sites in Anatolia such as Boğazköy (Boehmer 1972; 1979), Alişar (Von der Osten 1937), Konya-Karahöyük (Alp 1972) and Demircihöyük (Kull 1988).

In addition to the above finds, a fragment of the handle of a pitcher bearing an impression of a cylinder seal was found in 1986 (86000001) (Figs. 15-16). This fragment shows one of the characteristics of Assyrian Colony Trade Period pottery, a red-slipped and burnished surface, but has denser fabric and fired harder than the typical wares of that period. The design of the seal

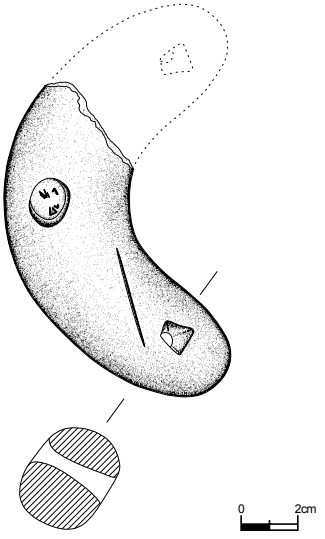

Fig. 10 Crescent-shape weight 86000002

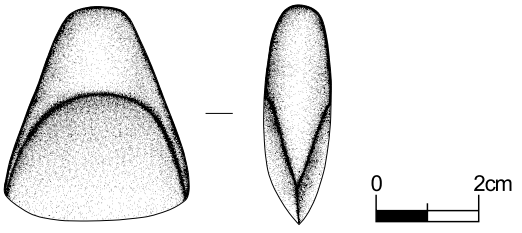

Fig. 11 Stone ax 02000002

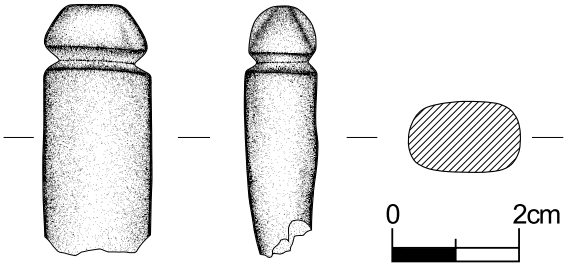

Fig. 12 Whetstone 07000013

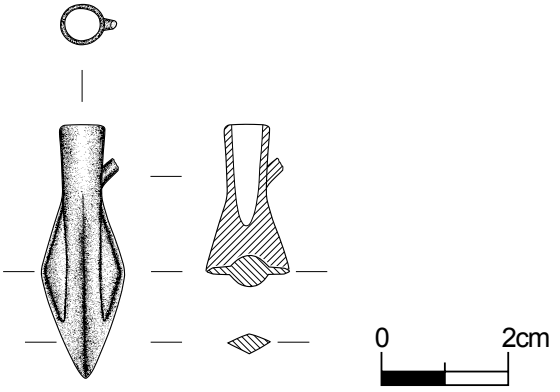

Fig. 13 Bronze arrowhead 07000010

Fig. 14 Bronze arrowhead 07000010

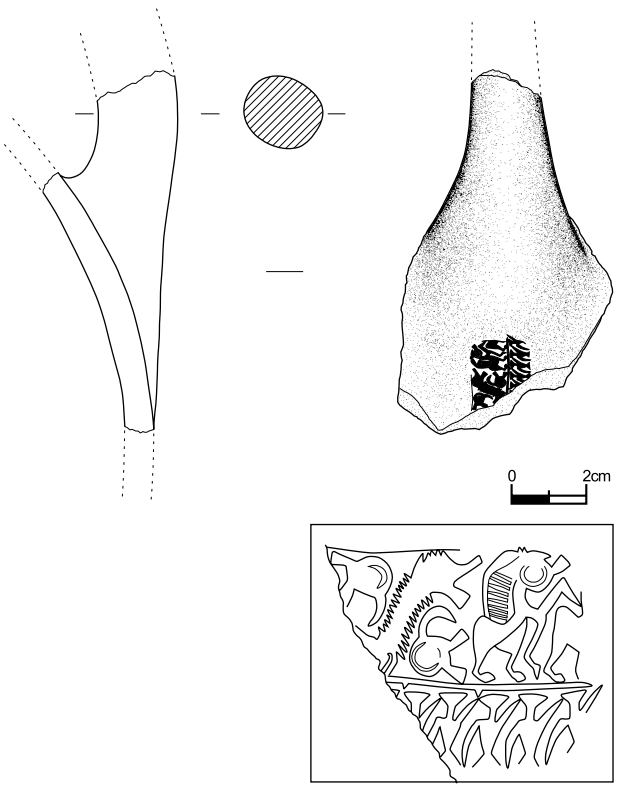

Fig. 15 Handle of a pitcher with an impression of a cylinder seal 86000001

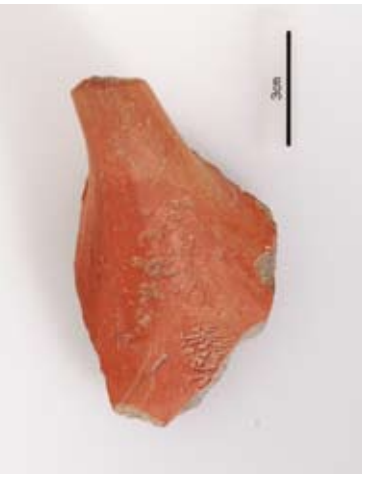

Fig. 16 Handle of a pitcher with an impression of a cylinder seal 86000001

impression is generally depicted in the style similar to Old Anatolian or Old Syrian-Popular style which are identified in Kültepe-Kaniš Karum and other sites (Özgüç, N. 1968; 1993, pp. 175-178; Porter 2001).

4.3.2. Pottery shards

The greatest number of pottery shards collected on and around Yassıhöyük are parallel to those found in the Stratum IIa to IIc of Kaman-Kalehöyük, dating to the 8th to 4th centuries B.C., and the rest are parallel to those of Stratum IIIb and IIIc, dating to the first half of the 2nd millennium B.C. Early Bronze Age, Hellenistic, and Roman pottery shards were also found, though in small numbers. Neither Byzantine nor Ottoman pottery was found.

4.3.2.1. Hellenistic and Roman pottery shards (Fig. 17/1-7. Table 1)

On the top of the mound, five Hellenistic period pottery shards were found (07000059, 07000103, 07000104, 07000105, 07000068). Four are shallow bowl or plate rims and the other is a body shard of a jar. The fabric is reddish or yellowish orange and although it includes some lime flecks, it is highly refined and partly slipped. At Sardis this type of Hellenistic pottery is classified as "the wheelmade wares-partially glazed pottery" (Rotroff and Oliver 2003, pp.24-31, pls.7-9). There are also some similar-looking examples among the Hellenistic pottery found in the city under Troy VIII (Berlin 1999, p.105 ff. Selected catalogue of ceramics and small finds, nos. 14-15, 19-22, 48, 66, 72-74, 96-97).

In the northern part of the top of the mound, very small shards of very thin and hard ware with orange, refined fabric were scattered. A base fragment of a Roman glass bottle was also found.

At the base of a hill about 500 m north of Yassıhöyük, a small shard whose original shape cannot be restored was found (07000102) (Fig. 17/7). It is made of refined, orange fabric and fired hard. Both of its outer and inner surfaces are slipped with the same color. The shard is too small to define the technique of manufacture, but according to the shape of the ends of the reliefed lines on the outer surface, it appears to be a shard of a molded ware.

4.3.2.2. Pottery shards of the Iron Age (Figs. 17/8-47/9)

Many Iron Age pottery shards were collected on the top of Yassıhöyük. Comparison with the Iron Age pottery found at Kaman-Kalehöyük indicates that similar

ceramic cultures must have developed at both sites.

Most of the Iron Age pottery from Yassıhöyük are wheelmade, but includes some handmade, such as large kraters. Fabrics vary from fine to very rough. They often contain mica and lime flecks. Both reduction-fired and oxidation-fired wares were found. Compared to the gray or black reduction-fired ware, the reddish brown or yellowish brown oxidation-fired ware was found in larger numbers, many of which are finished with red slip and some of them are finished with cream colored slip; however, the quantity of the gray ware, which is often excavated in Stratum IIa at Kaman-Kalehöyük and is characteristic of the period after the middle Phrygian, is not small. Among the reduction-fired ware, lead-colored ware (07000145, 0700161, 07000167, 07000196, 07000218, 07000224) and black polished ware (07000131, 07000143, 07000229, 07000241) are also found. Lead-coloured ware is slipped with mica on its outer surface and fired in reducing atomosphere. It is an indicator of IIa of Kaman-Kalehöyük, together with gold mica ware (07000126, 07000135, 07000179) which is also slipped with mica but fired in oxidizing atomosphere.

The Iron Age vessel shapes from the surface of Yassıhöyük are almost the same as those excavated from Kaman-Kalehöyük Stratum II: Bowls with a round shape (Figs. 24-26/3), carinated bowls (Figs. 28/4-30/3), bowls with S-profile (Figs. 30/4-31/2), shallow bowls or plates and deep bowls (Figs. 31/3-32/7); Jars without neck, including jars without neck nor collar (Figs. 32/8-38/3) and jars without neck and with collar (Figs. 38/4-39/2); Jars with neck, including pots with wide rims (kraters) (Figs. 43/4-46/4), jars with short neck (Fig. 39 /3-5) and jars with long narrow neck (Figs. 46/5-47/9); Cups and goblets (Fig. 23/1-5); Pitchers (Fig. 23/6-7). Among these typical Iron Age shapes, the carinated and S-profile bowls, the kraters, and the goblets are more worth to notice.

Carinated bowls and bowls with S-profile are developed in Early and Middle Iron Ages, which belong to IId and IIc at Kaman-Kalehöyük. In particular, quality slip ware bowls with S-profile and with painted everted rim (Fig. 21/8-9) and painted goblets with the same fabric (Fig. 23/1-4) are representative of Middle Iron Age ceramics which are parallel to Kaman-Kalehöyük IIc, together with Alişar IV painted pottery (discussed below) (Fig. 22/1-4). As for the "kraters" found at Yassıhöyük, in addition to the kraters of gray ware, which characterize Stratum IIa at Kaman-Kalehöyük, a shard of krater which has a high reliefed band inside the rim to support the lid (Fig. 43/4) is found. At Kaman-Kalehöyük this type of krater is observed only in IId1-2 building levels.

The fragment of so-called "Achaemenid bowl" (07000073) (Fig. 17/8) found at Yassıhöyük is a handleless bowl with a shallow body and a small base, with obvious carination and high everted rim. The thin ware with light yellowish brown fine fabric is fired evenly and hard. The interior and exterior of the rim is decorated with a wide red band. It is said that the Achaemenid bowl is a form which became popular in the 7th century B.C. and was produced and used widely in the period of the Achaemenid empire (Dusinberre 2003, p.177; Stronach 1978, Fig. 106/7, 8, 15). At Sardis, many Achaemenid bowls were found on the Achaemenid and Hellenistic phases and it is thought they were produced and used from the 6th to the last half of the 3rd centuries B.C. (Dusinberre 2003, p.178). On the late Phrygian Period level at Gordion (YHSS 4: c.550-300 B.C), it is reported that Achaemenid bowls were produced as "local gray ware" (Henrickson 1994, p.113; Voigt 1994, pp. 265-293, 273-274).

Painted pottery shards collected from the surface at Yassıhöyük are mainly painted with red or black (blackish brown, dark brown and dark red-brown) lines on a red, yellowish brown, or cream slip or a non-slipped burnished surface. There are also designs painted in one or two colors on a white or cream ground or panel put over slipped ware. Shard 07000022 (Fig. 19/2) is a good example of this: on a wide reliefed band on the upper part of the body of a large jar with burnished orange slip, the red lattice pattern is painted on thick white ground paint. Shard 07000063 (Fig. 20/4) has cream colored panels with a black frame. Both examples are typical patterns in Stratum IIa at Kaman-Kalehöyük. Shard 07000043 (Fig. 17/10), which is thought to be part of a gray slipped tile, is decorated with a combination of painted bands, concentric circles, and curved plant-like motifs. This tile and shard 07000070 (Fig. 17/9), have some resemblances with those from Boğazköy-Büyükkale Ia-b and Porusuk III (Bossert 1957, pp. 58-67,

p.60, Abb. 50, 53, 54a; 2000, p.72, Taf. 37/347, 108/347; Dupré 1983, p.123, pls.93/261, 263, 98/261-263). They may represent a different culture from the others.

The three types of motifs are seen on the painted pottery from Yassıhöyük: the one is geometric motifs, such as parallel lines, wavy lines, rhombuses, zigzags, concentric circles, triangles, bows, chevrons and crosses, the second is animal motifs such as deer and goats and the third is plant motifs. The rhombuses and triangles are filled with slanting lines. Parallel lines, bands and bows on the rims of the cream slipped bowls (Fig. 21) and zigzags, bands, triangles with lattices and bows on the exterior of the high rims of goblets (Fig. 23/1-3), which are typical motifs and pottery shapes of Kaman-Kalehöyük IIc, are found. The geometric motifs which are combined with fantastic animal motifs in the Late Iron Age parallel to the later Kaman-Kalehöyük IIa Stratum, are found (Fig. 20/6-8), though the fantastic animal thmeselves are not observed at Yassıhöyük. On the other hand for the painted ware of the Middle Iron Age parallel to Kaman-Kalehöyük IIc Stratum, the fragments of Alişar IV ware with figures of deers or goats expressed in silhouette together with plants, bands and concentric circles in black or brown were collected (07000084, 07000089, 07000090: Fig. 22/1-3). In Alişarhöyük 4M, large quantities of this ware were discovered, and Alişar or the surrounding area was thought to be the center of Alişar IV ware production (Von der Osten 1937, Figs. 421-425, 458-467). At Kaman-Kalehöyük, Alişar IV ware was unearthed in Stratum IIc2-3 and is considered one of the indicators of these levels. Alişar IV ware were also discovered at Gordion in EPB (Early Phrygian Building) V and VII and the Destruction Level (Sams 1994, pls. 91/807, 108/870-871, 113&III(1)/186, 126/932, 161/169-171), at Boğazköy Büyükkale II (Bossert 2000, Taf. 9-10, 104; Genz 2004, Taf. 74, 78f, 84a), and at Porusuk III (Dupré 1983, pls. 92, 97/258-260). Alişar IV ware is a very important indicator for considering the cultures of Early Phrygian or Middle Iron Age (Matsumura 2005, pp.457-460, 514-524).

4.3.2.3. Pottery shards of the Middle and Late Bronze Ages (Figs. 48/1-59/5, Table 1)

The Late and Middle Bronze Age pottery shards collected from the Yassıhöyük surface are parallel to those found in Stratum IIIb and IIIc at Kaman-Kalehöyük. Kaman-Kalehöyük IIIb is dated to the Old Hittite Period and IIIc is dated to the Assyrian Trade Colony Period.

Most of the collected shards are oxidation-fired red ware; many of those are red slipped and burnished, some are not slipped nor burnished. Though very few in number, some examples are orange slipped and burnished. Shards of refined pottery with cream slip and a burnished surface are also collected. Three types of red-slipped ware are observed. The one is with a refined slip and highly burnished, the second is with thin slip, and the third is with slip just on the rim. At Kaman-Kalehöyük, generally speaking, the first one is found in IIIc Stratum and the third is in IIIb Stratum.

The vessel shapes found among the Late and Middle Bronze Age surface shards at Yassıhöyük are standard ones: Bowls – round (Figs. 48-51), carinated or with S-profile (Figs. 52-53), shallow bowls or plates (Figs. 49/1, 54/1-2), deep bowls (Figs. 55/5, 56/1-2); Jars or pots – jars without necks (Figs. 54/3-57/2), jars with necks (Fig. 57/3), large jar with beaked spout (Fig. 57/5-7); Pitchers – beaked pitchers (Fig. 58/1-6), tea pot with short spout (Fig. 58/7-8), pitchers with strainer; pot stands (Fig. 59/1-2); and lids (Fig. 59/3-5).

One example which should be noted here is a thin shard of a plate with a pointed rim profile and with fine orange fabric that is cream-slipped and polished (88000001: Fig. 49/1). It is thought to be so-called "Porzellanware." Excavated examples from the Old Hittite Period (Unterstadt 3) at Boğazköy are reported by P. Neve. It is said that the latest examples are from Unterstadt 2 and Büyükkale IVb (Neve 1984, pp.63-89, pp.87, Abb. 11/80-84). Cream-slipped refined wares of the "Porzellanware" type were discovered with a zoomorphic rython and a stamp seal in Round Structure 2 in Kaman-Kalehöyük Stratum IIIb (Omura 2003a, Figs. 35-38, 41-53).

Shards of small carinated or S-profile bowls with triangular handles (Figs. 52/4, 53/5-6) are red slipped on both exterior and interior, or on the exterior and around the rim on the interior. At Boğazköy, this bowl type was excavated mainly from Büyükkale IVd-b、Unterstadt Schichit 5-4 (Fischer 1963, Taf. 103-108), which is equal

to Kaman-Kalehöyük IIIc-b, that is, from the Assyrian Trade Colony Period to the Old Hittite Period. In Kültepe-Kaniš Karumu II and Alişarhüyük 10-11T, many bowls of this type were found (Von der Osten 1937, Figs. 169-171, 219-222).

Two types of beaks were found, one is the beak for large storage jars (86000061, 86000070, 86000074, 07000039: Fig. 57/5-7) and the other is for pitchers with handles (86000111, 86000120, 86000136, 07000040, 07000041, 07000042: Fig. 58/1-6). The beaked pitcher is one of the characteristic pottery types of the 2nd millennium B.C. The beak fragments collected at Yassıhöyük are all red slipped and burnished. There are some variations to be observed: one is the straight and tapering beak (86000136: Fig. 58/5) which can be seen in Boğazköy-Büyükkale IVd and Unterstadt Schichit 4 (Fischer 1963, Taf. 25/274, 289; Orthmann 1984, Abb. 16/157), one has a round bulky end of the beak (07000042: Fig. 58/1) (Fischer 1963, Taf. 25/273, 291, 29/273, 288; Orthmann 1984, Abb. 16/153, 159, 160), one has the cut end (07000040: Fig. 58/2) (Fischer 1963, Taf. 25/288, 290; Orthmann 1984, Abb. 16/158, 17/161) and the one has the end like a square jaw (07000041: Fig. 58/3) (XVII; Özgüç, N. and T. 1953, pl. XXIII; Özgüç, T. 1959, pls. XXIX, XXXVI; 1986, pls. 98-99; Von der Osten 1937, Figs. 186-187, 225-227). The type with the beak end turned down sharply, found in Unterstadt Schichit 2, Büyükkale IVb-c in Böğazköy (Fischer 1963, Taf. 23/242, 24/244, 245, 27/275, 276, 30/278, etc.), was not observed among the Yassıhöyük collection.

Two spouts of a teapot-like vessel (86000045, 88000005: Fig. 58/7-8) were found, which are not slipped nor burnished. Fragments of a strainer from a teapot or pitcher were also found.

A fragment of the everted rim of a pithos has a red band painted quickly on it (02000044: Fig. 67/5). Similar examples were found in Alişarhüyük 10-11T (Von der Osten 1937, Figs. 197-198) and Kaman- Kalehöyük.

4.3.2.4. Pottery shards of the Early Bronze Age (Figs. 59/6-61/8, Table 1)

Shards of handmade ware with plant temper were collected at Yassıhöyük. These shards are divided into two groups. One is the shards of handmade ware with a slightly formed rim and red-slipped surface including round bowls, jars without necks, and jars with short necks (Fig. 59/6-60/6). The other is those of the handmade ware with simpler forms without formed rim including round bowls, conical bowls, square bowls with a flat bottom, and pots without a neck (Figs. 60/7-61/8). Similar wares to these groups are found in the Early Bronze Age levels at Kaman-Kalehöyük: the first group in Stratum IVa and the second in Stratum IVa and IVb. Other collected shards with coarser fabrics including much sand or grit seem to date to the Chalcolithic rather than Early Bronze Age.

4.3.2.5. Pottery shards collected around Yassıhöyük (Figs. 62-67, Table 2)

Surface shards were also collected in the outskirts of the mound to a distance of about 500m in 2002. Most of the collected shards in the north, northwest, west, south, southeast and east areas around the mound were identified as belonging to the 2nd millennium B.C., and the characters and qualities are almost the same as those gathered on the mound itself. Details are listed in Table 2.

4.3.3. A lead strip

A lead strip was said to be brought to the Museum of Anatolian Civilizations in Ankara in 2006 by a man who lived in the vicinity of Yassıhöyük[3]. This lead strip is a fragment of a letter in Hittite hieroglyphics, similar to those found in Kululu and Sultanhan. According to R. Akdoğan and D. Hawkins, the Yassıhöyük letter was addressed to King Tuwati from his servant Muwatalli (Akdoğan and Hawkins 2008). King Tuwati was one of the strongest kings of the Neo-Hittite city-states of Tabal dating to the period of Tiglath-pileser III and SargonII, or the second half of the 8th century B.C. (Hawkins 2000, Part 2: Text, pp.503-505, pls. 286-289, 306-313; Özgüç, T. 1971, pp.32-36, 60-64, 94-96, 111-116).

4.4. Supposed cultures at Yassıhöyük

Based on study of the pottery shards collected from the surface at Yassıhöyük, the main cultures represented

[3] No. of inventory of Museum of Anatolian Civiliztions: 13-1-06. According to R. Akdoğan, it is 18.5 cm long, 2.8 cm wide and 1.5 mm thick.

at the site are likely to be in the ages as follows: 1) Late Iron Age (5th to 4th centuries B.C.), parallel to the later Stratum IIa at Kaman-Kalehöyük; 2) Middle Iron Age (8th century B.C.), parallel to Stratum IIc at Kaman-Kelhöyük; 3) Middle and Late Bronze Ages (first half of the 2nd millennium B.C.), parallel to Stratum IIIc and IIIb at Kaman-Kalehöyük; and 4) Early Bronze Age (end of the 3rd millennium B.C.), parallel to Stratum IV at Kaman-Kalehöyük.

The date of the large building observed in the geomagnetic survey cannot be determined before excavation. However, based on the results of study on the pottery shards mentioned above, three possibilities can be suggested: a) the building belongs to the Late Iron Age when the Achaemenid Persians had power and Lydians' influenced over Central Anatolia; b) the building belongs to a kingdom related to Tabal of the Neo-Hittite period; c) the building belongs to one of the city-states of first half of the 2nd millennium B.C., when the Assyrian and local merchants were active in the trades between Assur and Kaniš and between Kaniš and other city-states in Anatolia and built their settlements on the outskirts of the city.

5. FUTURE INVESTIGATIONS AT YASSIHÖYÜK

Future work planned at Yassıhöyük includes the following:

1) Continue the geomagnetic survey of the mound and the surrounding area to delineate the shape of the site.
2) Excavate the large building defined with the geomagnetic survey.
3) Excavate the city walls.

This work will identify the structure of the settlement of Yassıhöyük, which could be a city-state in one of the three possible periods which the building belongs to. Based on the results of investigations at Yassıhöyük and considering the work of other sites in Anatolia, we would like to develope the regional research such as how cities in the region were related with each other and how the ancient trade routes in Anatolia developed and interconnected.

ACKNOWLEDGEMENTS

I express gratitude to Dr. Sachihiro Omura, Director of Japanese Institute of Anatolian Archaeology, for supporting the archaeological survey at Yassıhöyük and to all the members who contributed to the success of this survey. Dr. Kimiyoshi Matsumura shared his knowledge to analyze the collected ceramics and organized the aerial photography, Mr. Kazuhiro Kumagai was in charge of the magnetic survey and gave us great results beyond our expectations, Mr. Sabri Aydal made the topographic map which will be the fundamental map for all our future work, and Mr. Takayuki Oshima took the pictures of Yassıhöyük from all directions in difficult conditions. I also thank Mr. Salih Çöl and other local staff of Japanese Institute of Anatolian Archaeology. They supported the survey at the site and made the magnificent drawings of the finds which are shown in this report. I wish also to thank the staff of the Institute for their behind-the-scene work that allows us to survey and carry out other work at the site.

BIBLIOGRAPHY

Akdoğan, R. and J. D. Hawkins
2008 "Kırşehir-Yassıhöyük'ten Ele Geçen luvi Hiyeroglif Yazılı Kurşun Levha," a paper given at 7. Uluslararası Hititoloji Kongresi, 25-31 August 2008.

Alkım, U.B.
1956 "Kırşehir Hüyüğü ve Topraküstü Bulntuları – Kırşehir: Hüyük und Lesenfunde," *BELETEN* XX (1956), pp.62-68, 81-88.

Alp, S.
1972 *Konya Civarında Karahöyük Kazılarında Bulunan Silindir ve Damga Mühürleri*, Ankara.

Berlin, A. M.
1999 "Studies in Hellenistic Ilion: The Lower City. Stratified assemblages and Chronology," *STUDIA TROICA* 9, pp.73-157.

Bittel, K.
1967 Kleinasiatische Studien, *IstMit* 5 (1942) (2nd ed.)

Boehmer, R. M.
1972 *Die Kleinfunde von Boğazköy*

Grabungskampagnen 1931-1939 und 1952-1969, K. Bittel (ed.), Boğazköy-Ḫattuša Ergebnisse der Ausgrabungen VII, Berlin.

1979 *Die Kleinfunde aus der Unterstadt von Boğazköy Grabungskampagnen 1970-1978*, K. Bittel (ed.), Boğazköy-Ḫattuša Ergebnisse der Ausgrabungen X, Berlin.

Bossert, E.-M.

1957 "Funde nachhethitischer Zeit," *MDOG* 89 (1957), pp. 58-67. p.60, Abb.50, 53, 54a.

2000 *Die Keramik Phrygischer Zeit von Boğazköy*, Boğazköy-Ḫattuša Ergebnisse der Ausgrabungen XVIII, Mainz am Rhein.

Chantre, E.

1898 *Mission de Cappadoce (1893-1894)*, Paris.

Dercksen, J. G.

1996 *The old Assyrian Copper Trade in Anatolia*. Publication de l'Institut historique-archéologique nérlandais de Stamboul LXXV, Leiden.

Dupré, S.

1983 *Porsuk I. La ceramique de l'âge du bronze et de lâge du Fer*, Institut Français d'Études Anatoliennes Mémoire no 20, Paris.

Dusinberre, E. R. M.

2003 *Aspects of Empire in Achaemenid Sardis*, Cambridge.

Fischer, F.

1963 *Die Hethitische Keramik von Boğazköy*, Boğazköy-Ḫattuša IV, WVDOG 75, Berlin.

Genz, H.

2004 *Büyükaya I. Die Keramik der Eisenzeit. Fund aus den Grabungskampagnen 1993 bis 1998*, Boğazköy-Ḫattuša Ergebnisse der Ausgrabungen XXI, Mainz am Rhein.

Hawkins, J. D.

2000 *Corpus of Hieroglyphic Luwian Inscriptions Volume I: Inscriptions of Iron Age*, Berlin, New York.

Henrickson, R. C.

1994 "Continuity and Discontinuity in the Ceramic Tradition at Gordion during the Iron Age," in D French and A. Çilingiroğlu (eds.), *Proceedings of the Third International Anatolian Iron Age Symposium (Van 1990)*, Ankara, p.113.

Kull, B.

1988 *Die Mittelbronzezeitlische Siedlung Mit Einem Anhang von H.Kammerer-Grothaus und A.-U. Kossatz zu Antiken Funden aus Demirchihüyük*, Demircihüyük Die Ergebnisse der Ausgrabungen 1975-1978, Band V, Mainz am Rhein.

K. Kumagai

2008 "A Report of Preliminary Magnetic Survey in Yassıhöyük," *AAS* XVII, pp.171-174.

Maden Tetkik ve Arama Genel Müdürlüğü (ed.)

1990 *1:100 000 ölçekli Açınsama Nitlikli Türkiye Jeoloji Haritaları Serisi* No.37, Ankara.

1991 *1:100 000 ölçekli Açınsama Nitlikli Türkiye Jeoloji Haritaları Serisi* No.38, Ankara.

Matsumura, K.

2005 *Die Eisenzeitliche Keramik in Zentralanatolien Aufgrund der Grundlage der Ausgrabung von Kaman-Kalehöyük*, Dissertation, Berlin.

Meriggi, P.

1966 "Quinto Viaggio Anatolico" *OrAnt* V-1(1966), p.106,109, l.XXXIX/Fig.75.

Mikami, T. and S. Omura

1987 "1986 Kırşehir İli Sınırları içinde Yapılan Yüzey Araştırmaları," *AST* 1987, p.126, res.16, 17, 37, 53/8-13.

1991 "General Survey of Kaman-Kalehöyük in Turkey (1985)," *BMECCJ* Vol. 4(1991), pp.62-63.

Naruse, T.

1994 "Geomorphological Environments in Kaman-Kalehöyük(1) (in Japanese)," *AAS* III (1994), pp.55-65.

Naruse, T. *et al.*

1997 "Geomorphological Environments in Kaman-Kalehöyük(2) (in Japanese)," *AAS* VI (1997), pp.143-147.

Neve, P.

1984 "Ein althethitischer Sammelfund aus der Unterstadt," *Boğazköy* VI: Funde aus den Grabungen bis 1979, Berlin, pp.63-89.

Omura, S.

2001 "Preliminary Report of the General Survey in Central Anatolia(2000)", *AAS* X (2001), p.43, Figs. 81 and 82.

2003a"Preliminary Report on the 17th Excavation at

Kaman-Kalehöyük (2002)," *AAS* XII, pp.1-35.

2003b "Preliminary Report of the General Survey in Central Anatolia (2002)", *AAS* XII (2003), p.53, Figs. 119-125.

Orthmann, W.

1984 "Keramik aus den ältesten Schichten von Büyükkale," in K.Bittel *et al*., *Boğazköy VI: Funde aus den Grabungen bis 1979*, Berlin pp.9-62.

Özgüç, N.

1968 *Kaniş Karumu Ib Katı Mühürleri ve Mühür Baskıları – Seals and Seal Impressions of level Ib from Karum Kanish*, Ankara.

1980 "Seal Impressions from the Palaces at Acemhöyük," in E. Porada (ed.), Ancient Art in Seals, Princeton 1980, pp. 61-99.

1993 "Identical Aspects of the Cylinder and Stamp Seal Representations of Level Ib Period," *Ist Mitt* 43(1993), pp. 175-178.

Ozgüç, N. and T.Özgüç

1953 *Ausgrabungen in Kültepe, Bericht über die im Auftrage der Türkischen Historischen Gesellschaft, 1949 Durchgeführten Ausgrabungen*, Ankara.

Özgüç, T.

1950 *Ausgrabungen in Kültepe, Bericht über die im Auftrage der Türkischen Historischen Gesellschaft, 1948 Durchgeführten Ausgrabungen*, Ankara.

1959 *Kültepe-Kaniş, New Researches at the center of the Assyrian Trade Colonies*, Ankara.

1971 *Demir Devrinde Kültepe ve Civarı – Kültepe and its vicinity in the Iron Age*, Ankara.

1986 *Kültepe-Kaniş II, new Researches at the Trading Center of the Ancient Near East*, Ankara.

Ptolemaeus

Geographia Book 5/6, Cappadocia.

Ramsey, W. M.

1890 *The Historical Geography of Asia Minor*, London.

Rotroff, S. I. and A. Oliver, Jr.

2003 *The Hellenistic Pottery from Sardis: The Finds through 1994*, Archaeological Exploration of Sardis Monograph 12, Cambridge, Massachusetts 2003, pp.24-31, pls.7-9.

Sams, G. K.

1994 *The Early Phrygian Pottery, The Gordion Excavations, 1950-1973*: Final Reports Vol. IV, University Museum Monograph 79, The University Museum, University of Pennsylvania.

Sevin, V.

1998 "Historical Geography," in M. Sözen (ed.), *Cappadocia*, Istanbul, pp.44 - 61.

Stronach, D.

1978 *Pasargadae. A Report on the Excavations Conducted by the British Institute of Persian Studies from 1961-1963*, Oxford.

Texier, Ch.

1839 *Description de L'Asie Mineure:Beaux-Arts, Monuments Historiques, Plans et Topographie des Cités Antiques*, Paris.

Veenhof, K. R. and J. Eidem

2008 *Mesopotamia: The Old Assyrian Period*. Orbis Biblicus et Orientalis 160/5, Freiburg/Göttingen.

Voigt, M. M.

1994 "25. Excavations at Gordion 1988-89: The Yassıhöyük Stratigraphic Sequence," in D French and A. Çilingiroğlu (eds.), *Proceedings of the Third International Anatolian Iron Age Symposium (Van 1990)*, Ankara, 265-293, 273-274.

Osten, H. H. von der

1929 *Explorations in Central Anatolia Season of 1926*, The University of Chicago, OIP V, Reasearch in Anatolia I, Chicago.

1937 *The Alishar Hüyük Seasons of 1930-1932*, Part II, The University of Chicago, OIP XXIX, Chicago.

Yukishima, K.

1992 "The Bronze Arrowheads found in Kaman-Kalehöyük (in Japanese)," *AAS* I, pp. 91- 93.

1998 "The Metal Arrowheads from Kaman-Kalehöyük (in Japanese)," *AAS* VII, pp.183-204.

Masako Omura
Japanese Institute of Anatolian Archaeology
of the Middle Eastern Culture Center in Japan
Çağırkan, Kaman, Kırşehir 40350 Turkey
masaomura112@nifty.com

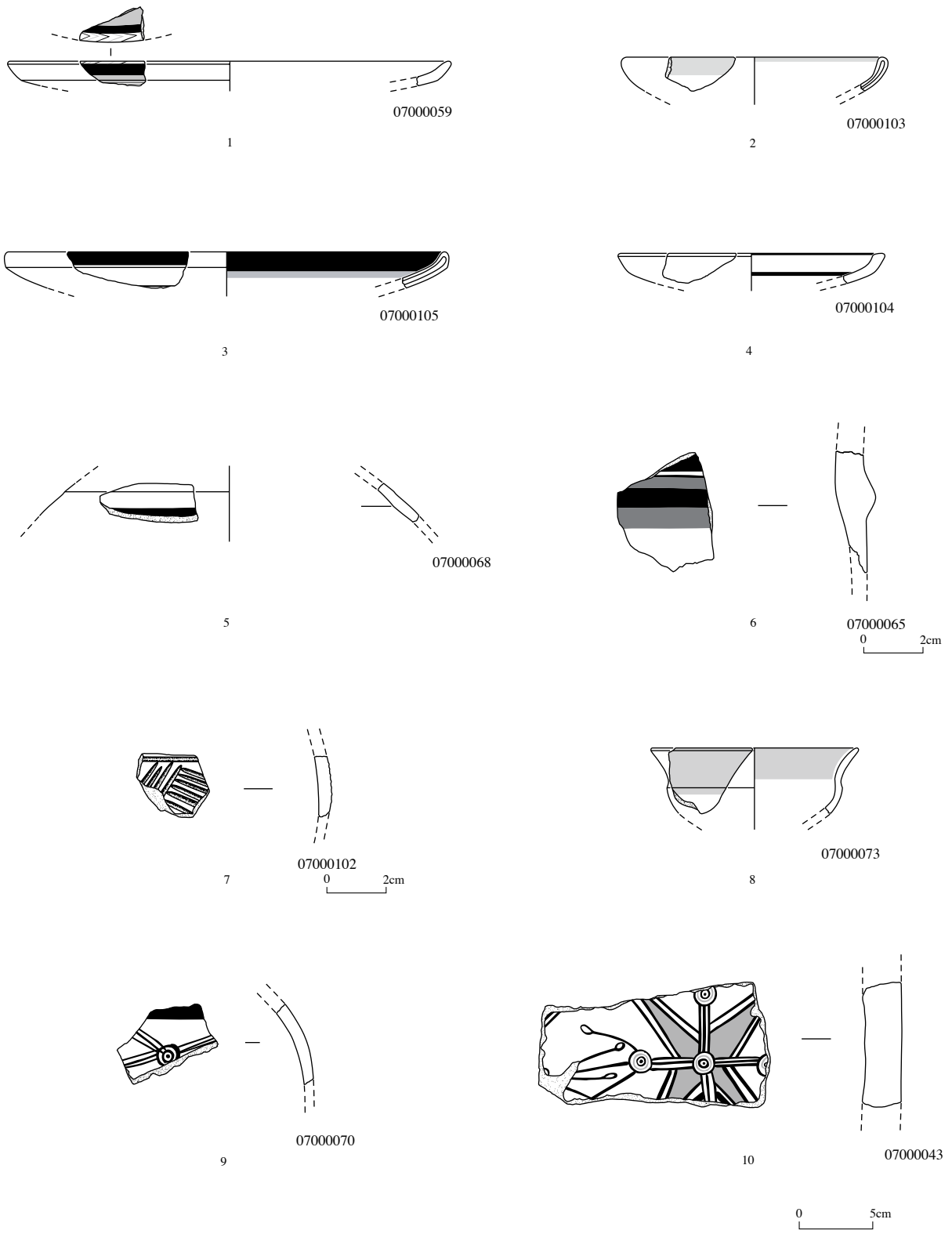

Fig. 17 In Fig. 17 to 67, refer scale in the lower right-hand corner of each page except occasions that a figure has given its own scale. 1-7: Hellenistic and Roman pottery shards; 8: Achaemenid bowl; 9-10: Painted pottery shards of 1. Millen. B.C.

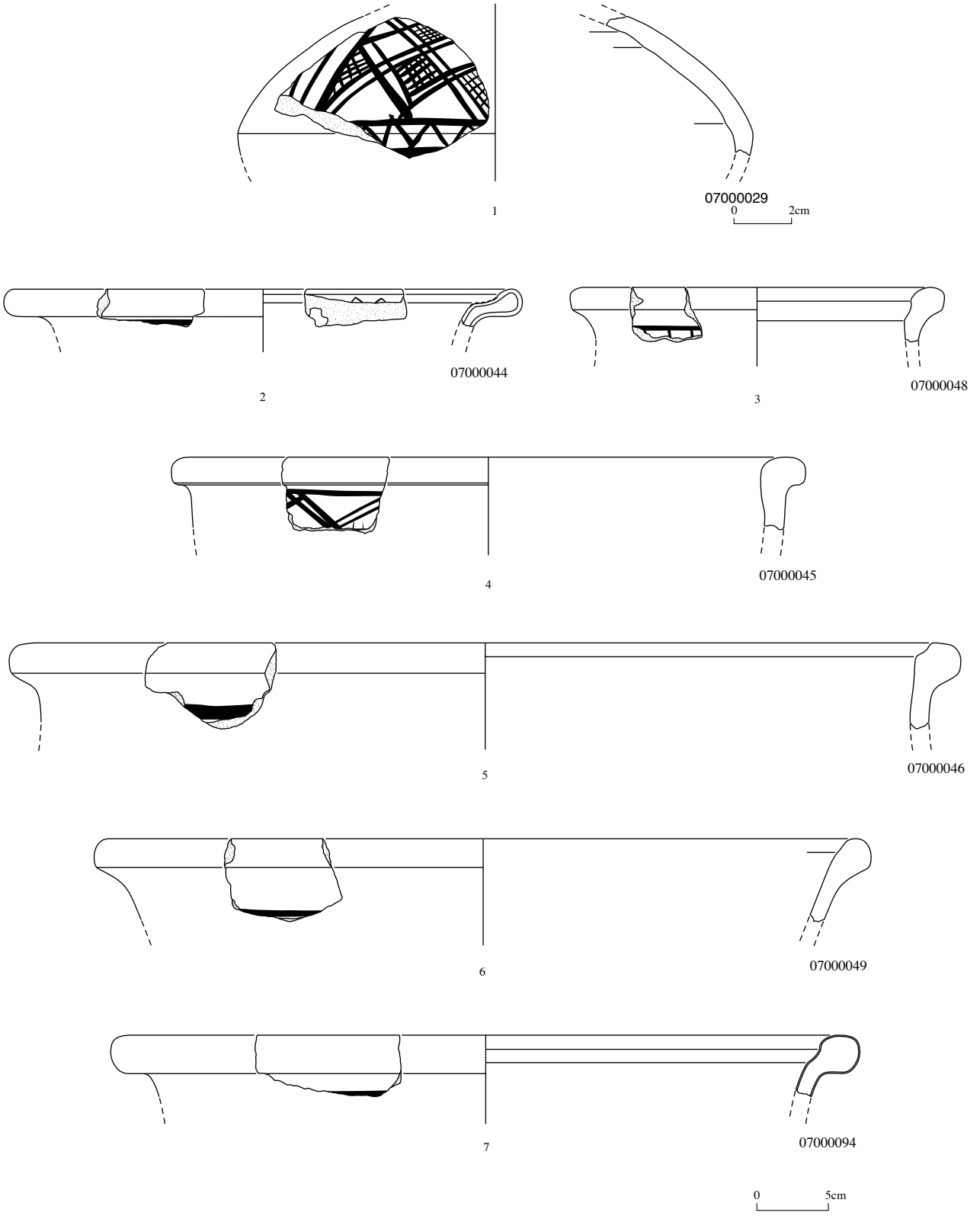

Fig. 18 Painted pottery shards of 1st Millennium. B.C.

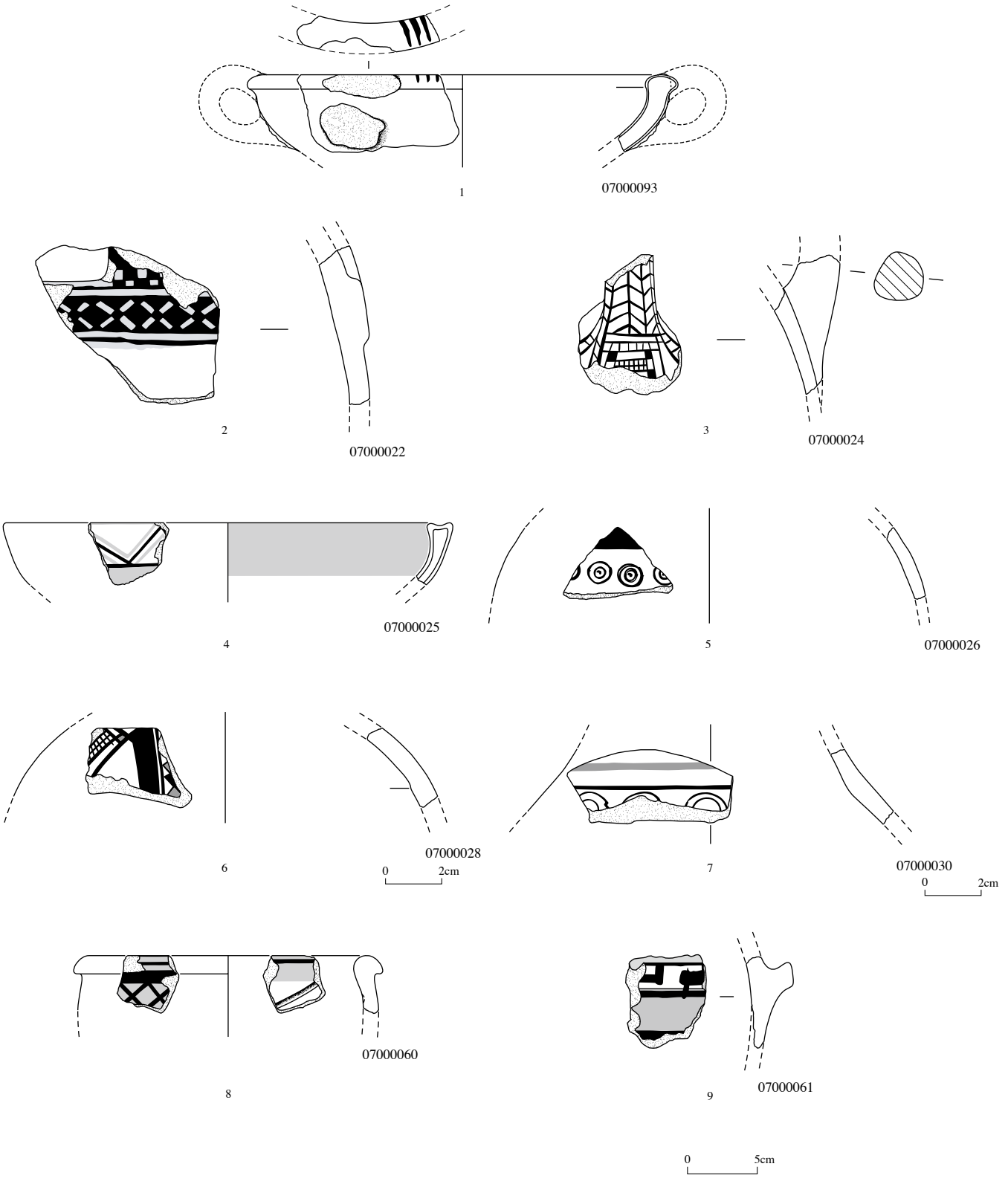

Fig. 19 Painted pottery shards of 1st Millennium. B.C.

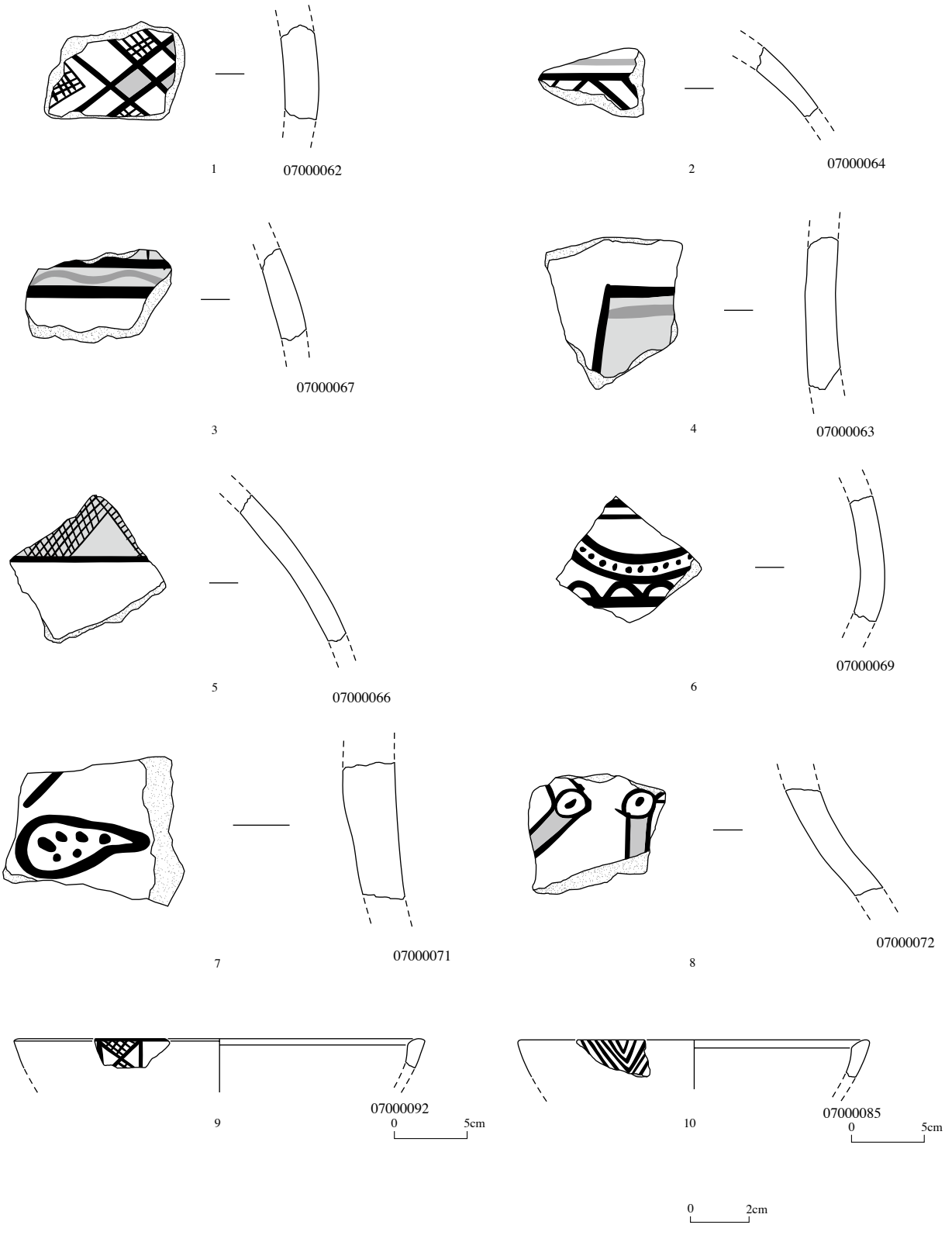

Fig. 20 Painted pottery shards of 1st Millennium. B.C.

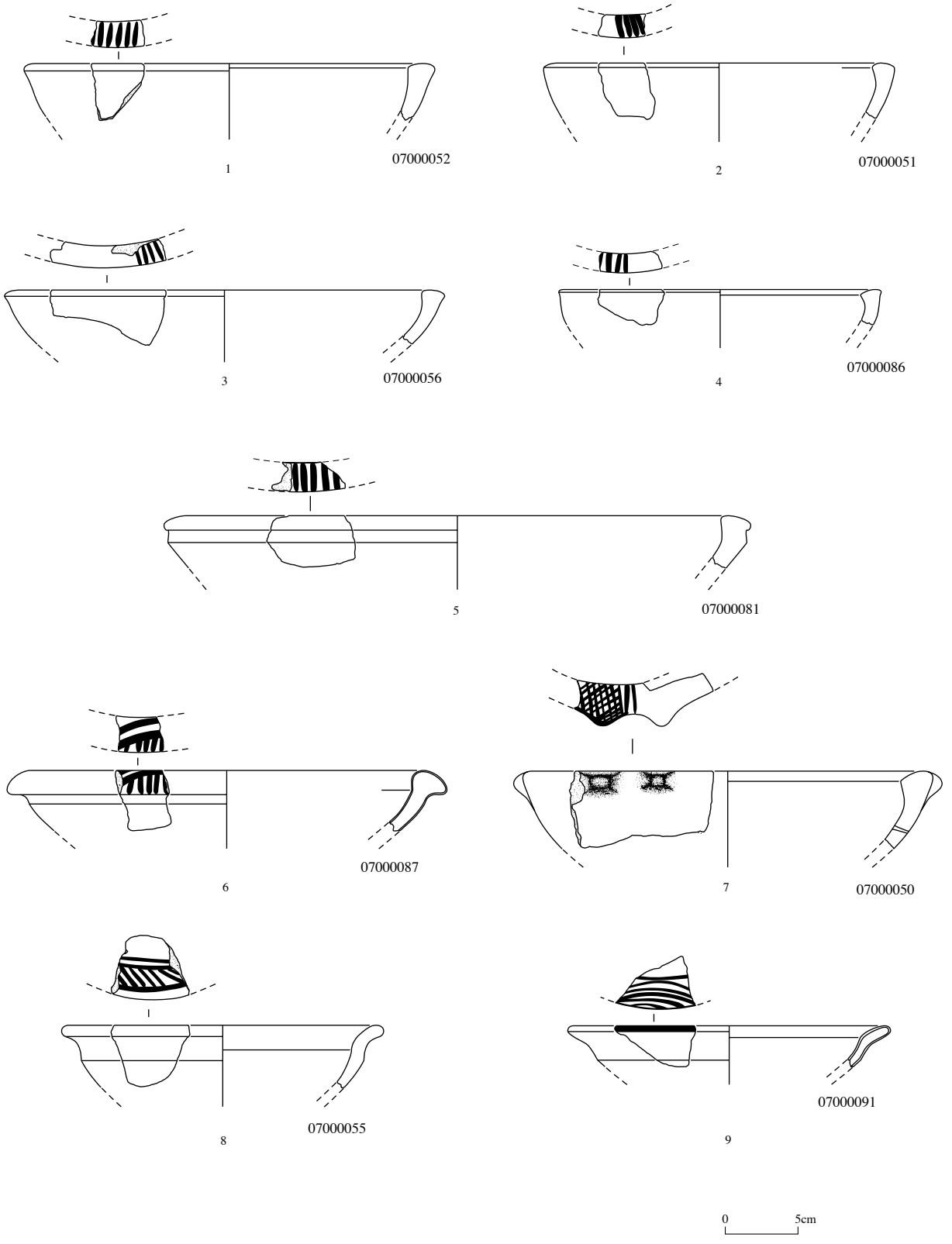

Fig. 21 Painted pottery shards of 1st Millennium. B.C.

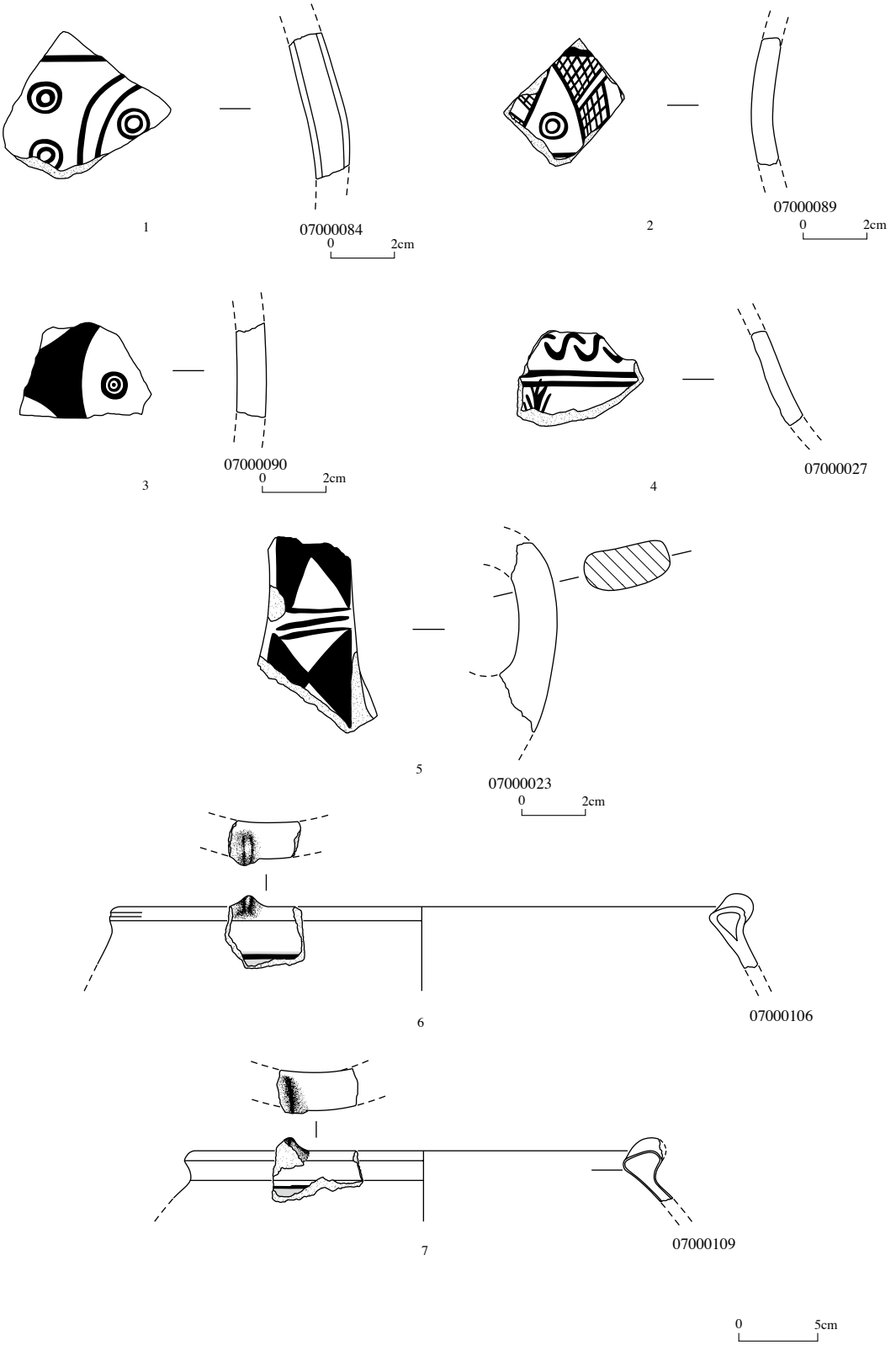

Fig. 22 Painted pottery shards of 1st Millennium. B.C.

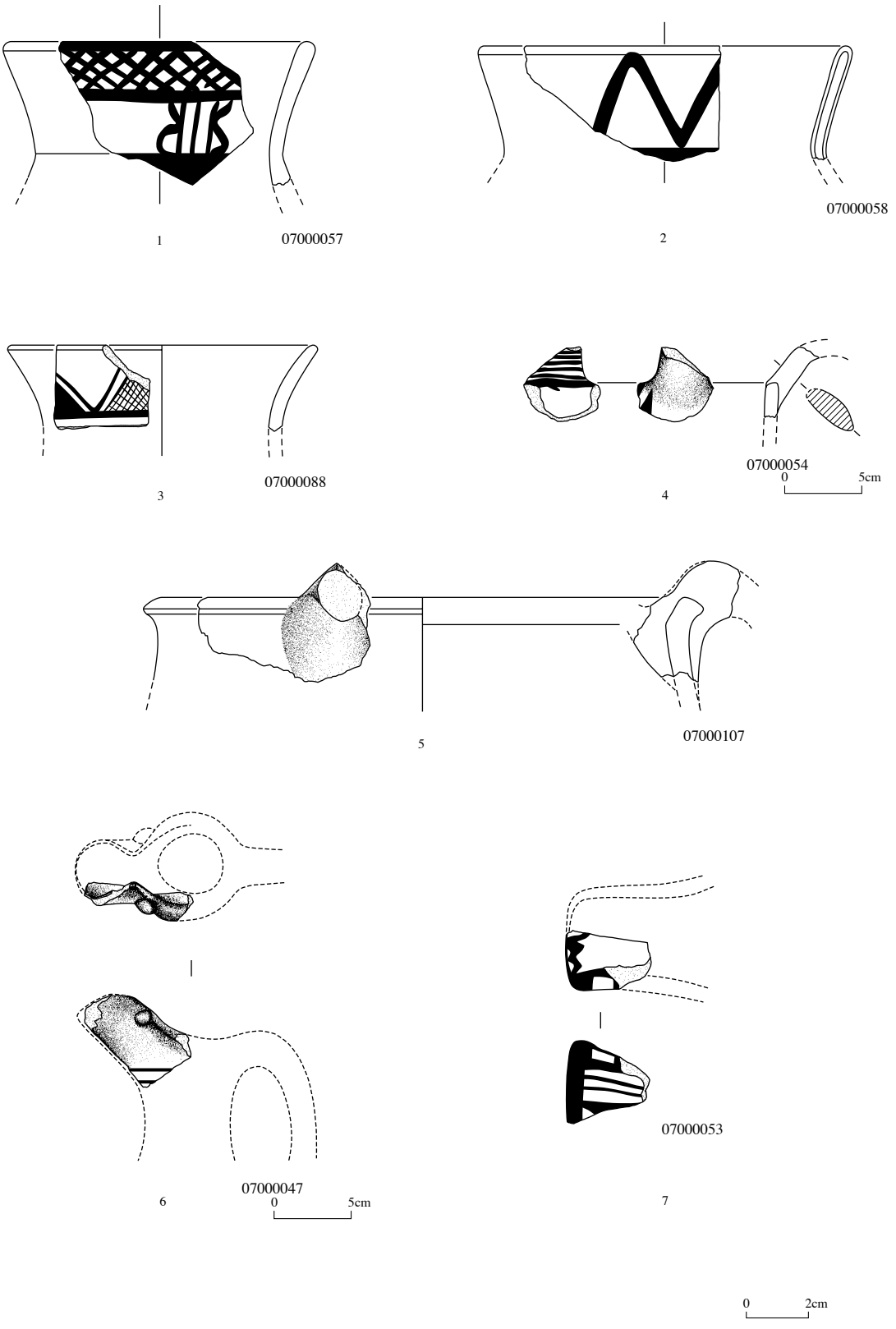

Fig. 23 Painted pottery shards of 1st Millennium. B.C.

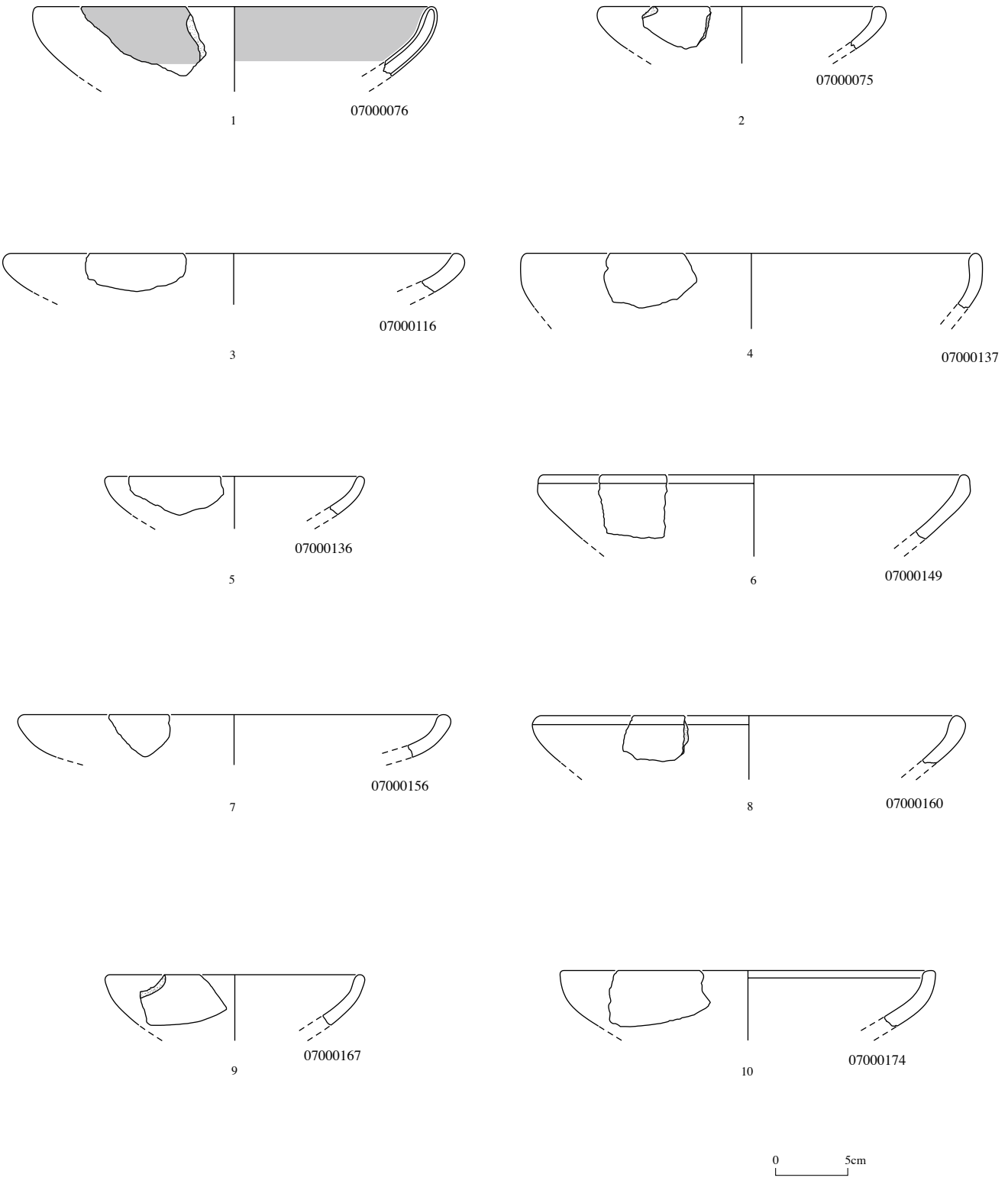

Fig. 24 Pottery shards of 1st Millennium B.C. Round bowls

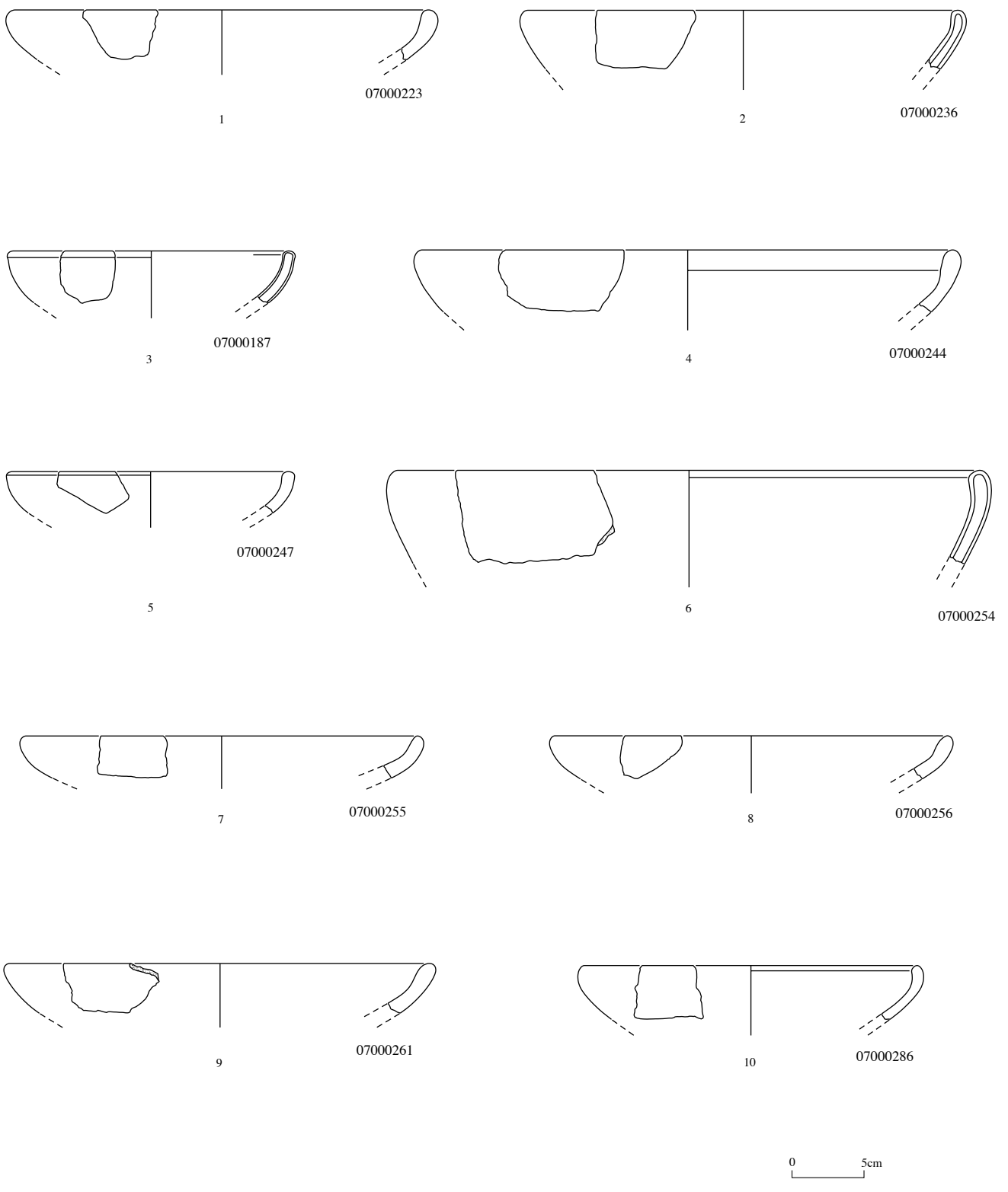

Fig. 25 Pottery shards of 1st Millennium B.C. Round bowls

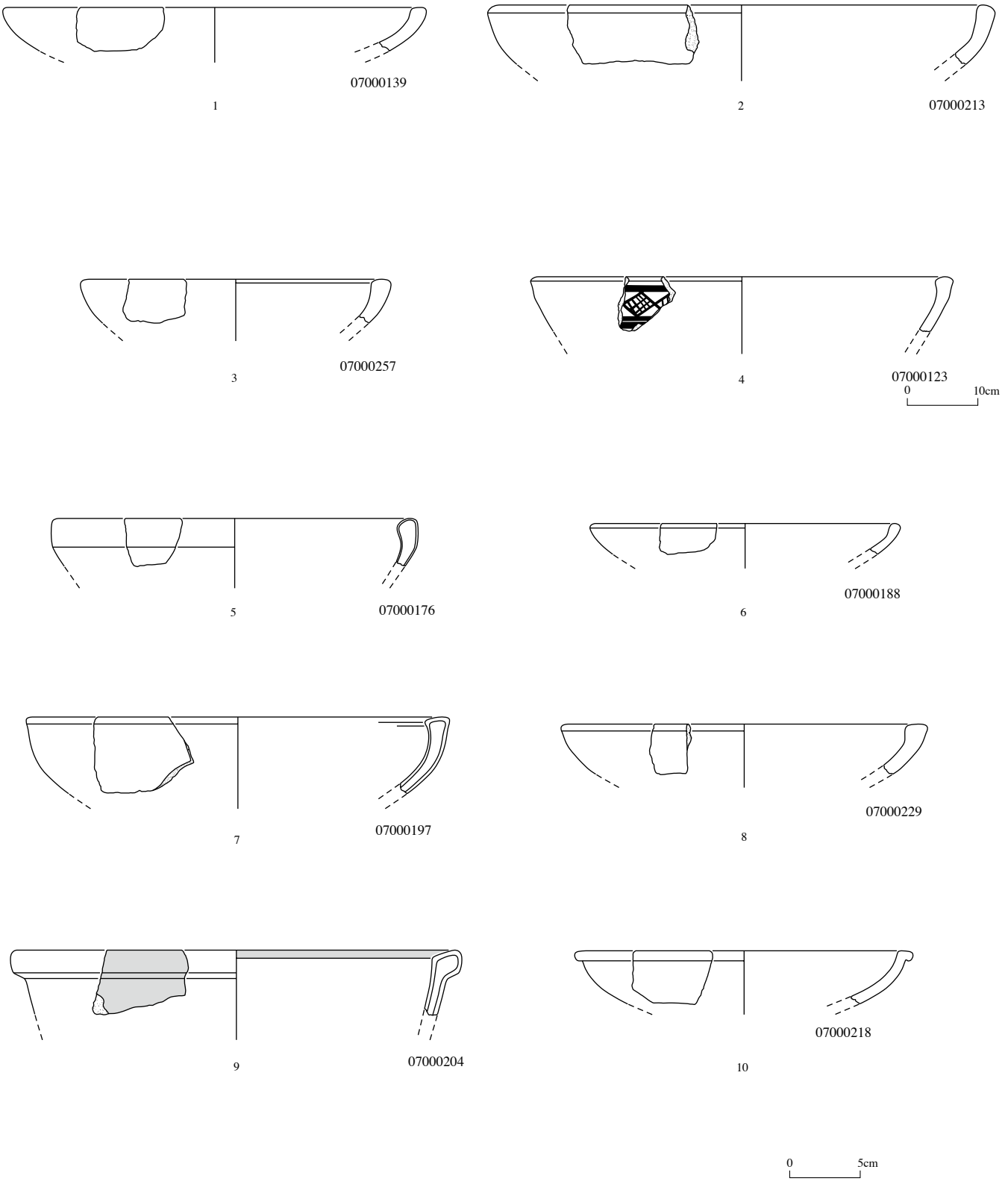

Fig. 26 Pottery shards of 1st Millennium B.C. Round bowls

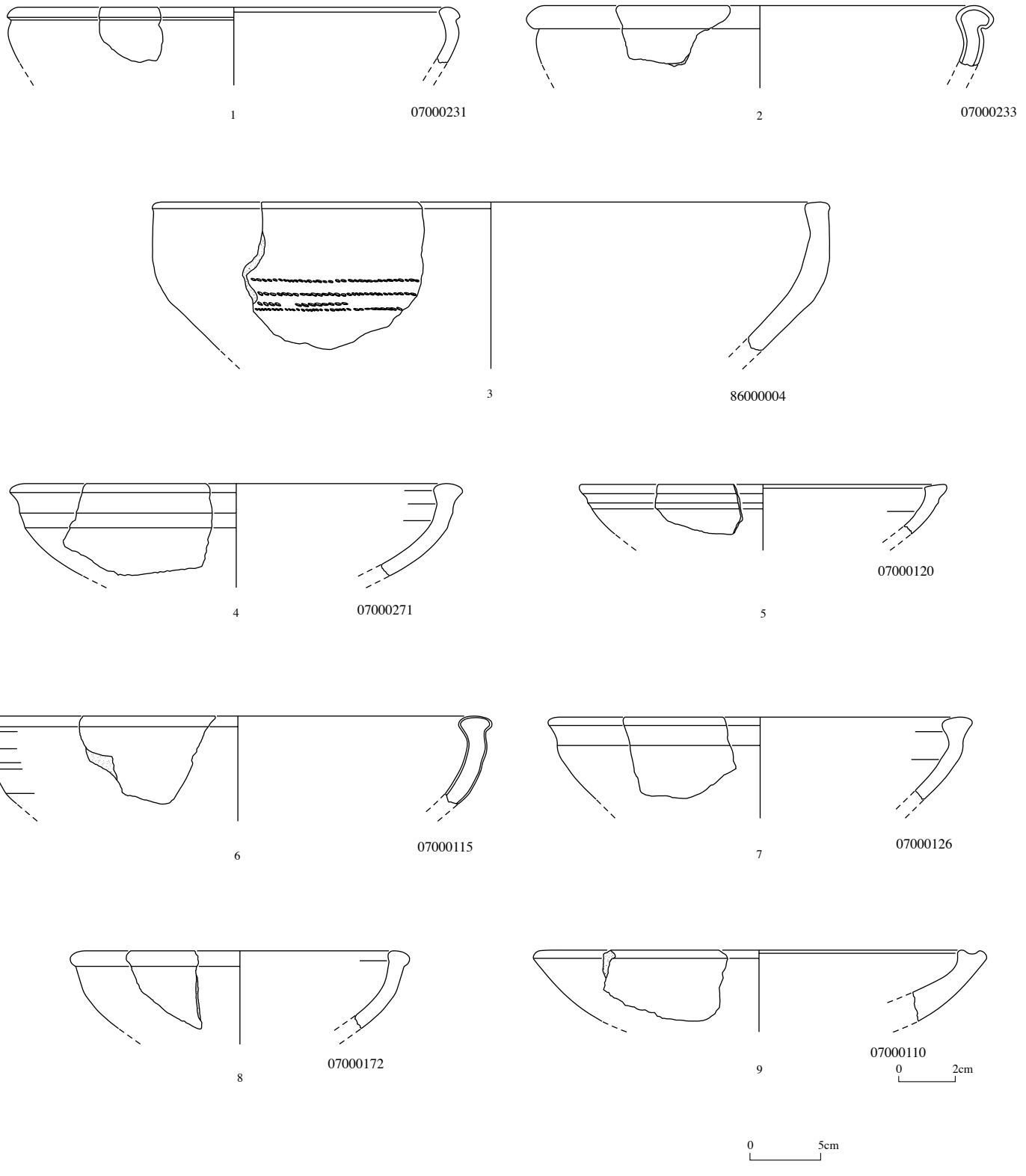

Fig. 27 Pottery shards of 1st Millennium B.C. Round bowls

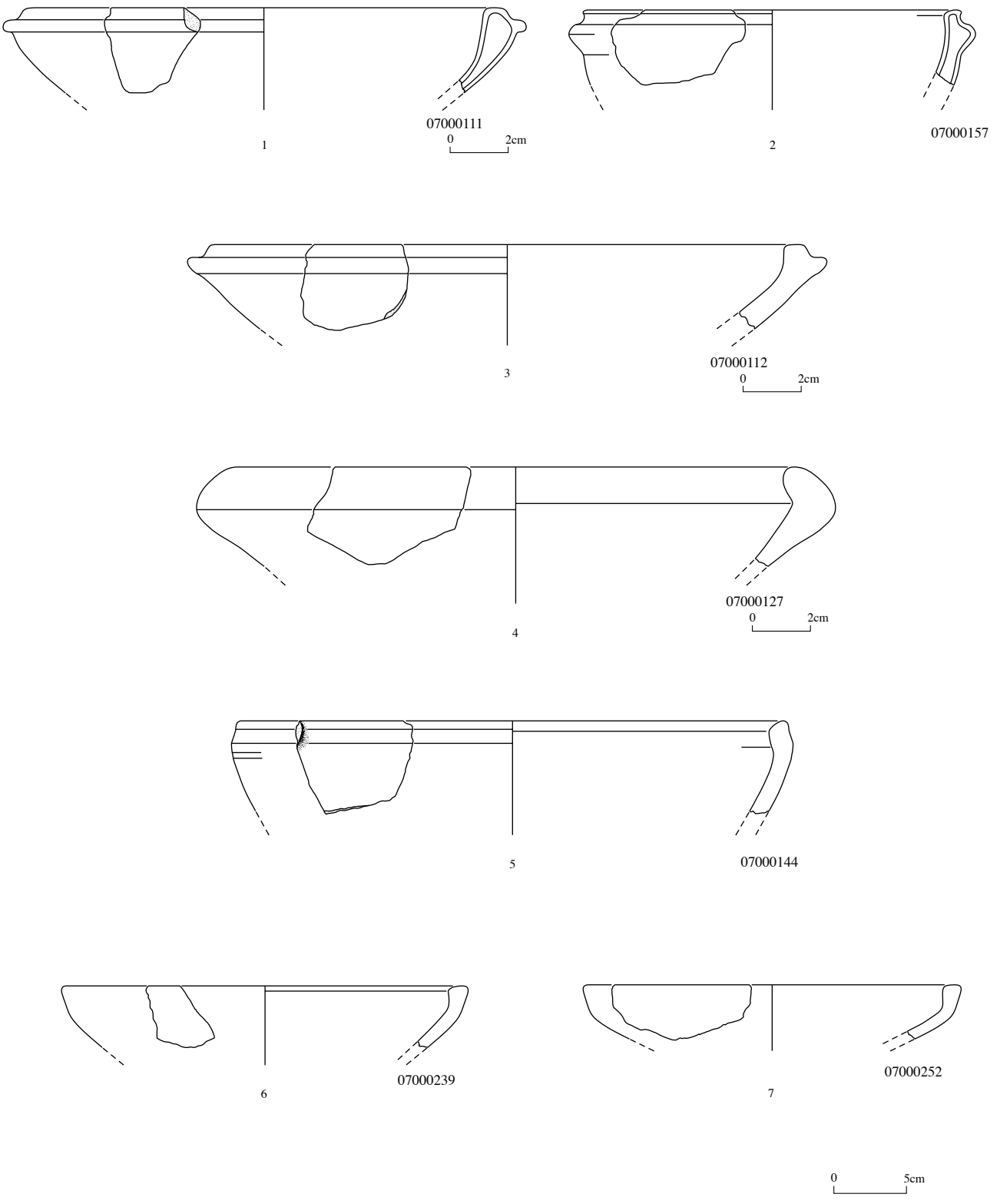

Fig. 28 Pottery shards of 1st Millennium B.C. 1-3: Round bowls; 4-7: Bowls with carination

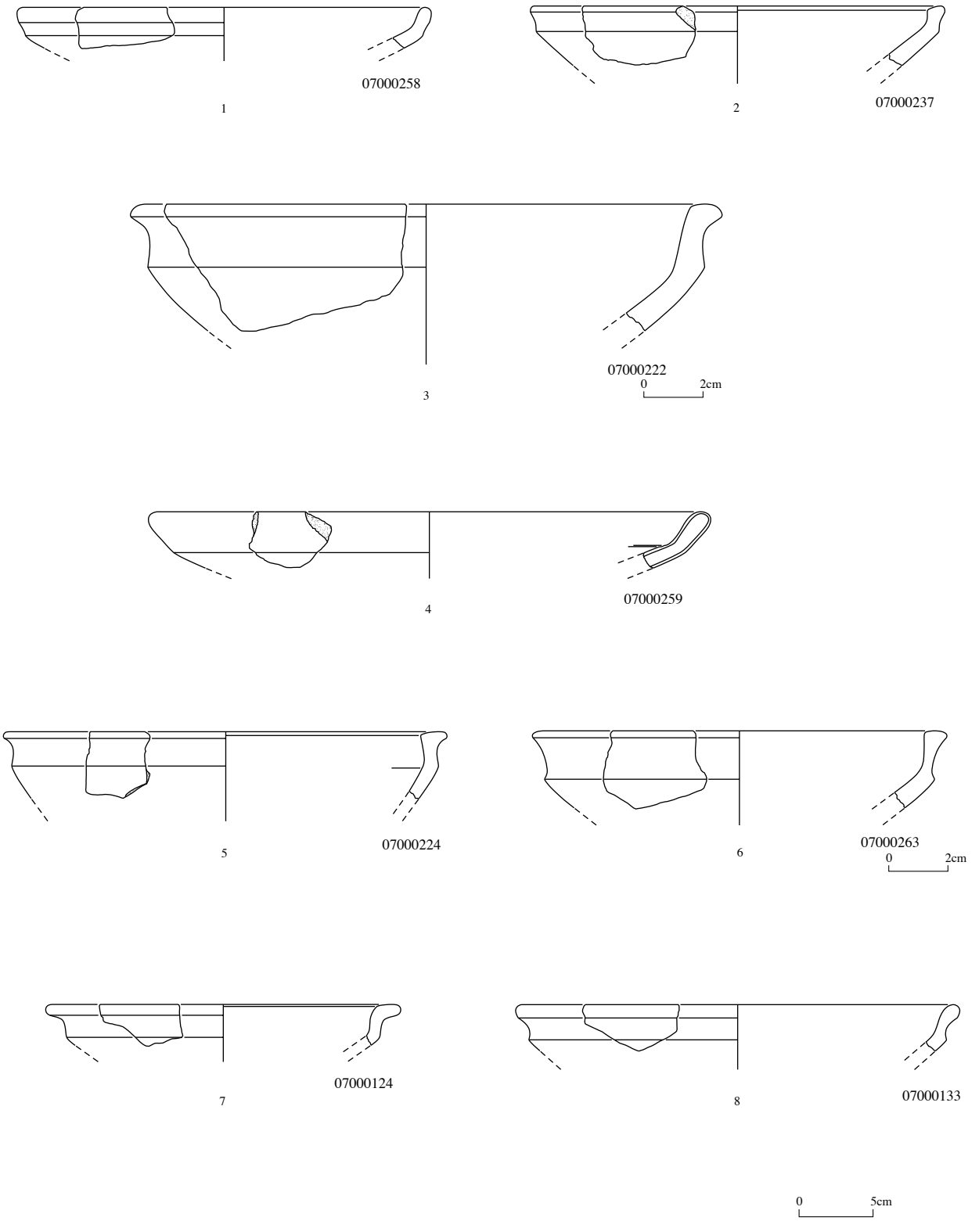

Fig. 29 Pottery shards of 1st Millennium B.C. Bowls with carination

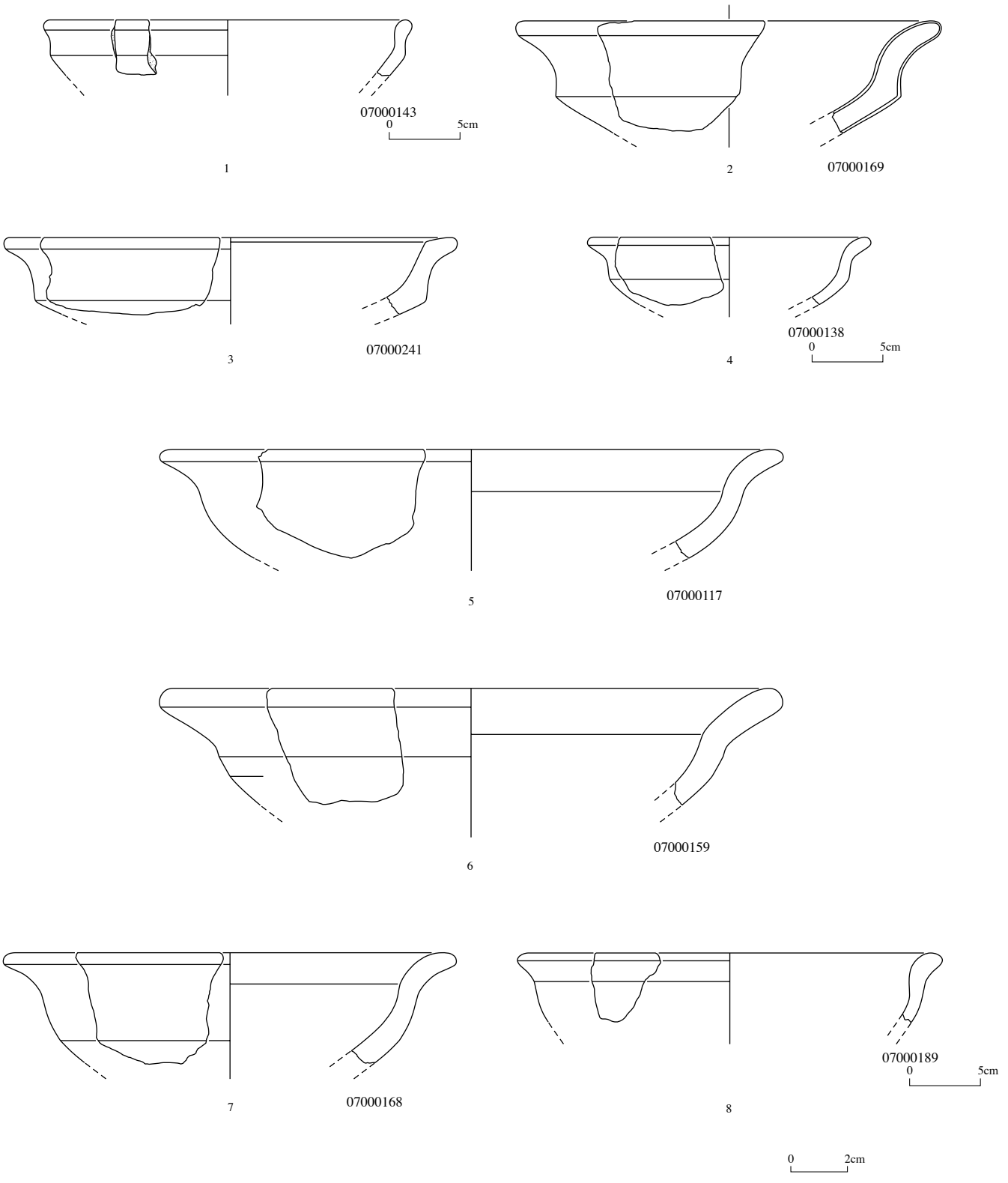

Fig. 30 Pottery shards of 1st Millennium B.C. 1-3: Bowls with carination; 4-8: Bowls with S-profile

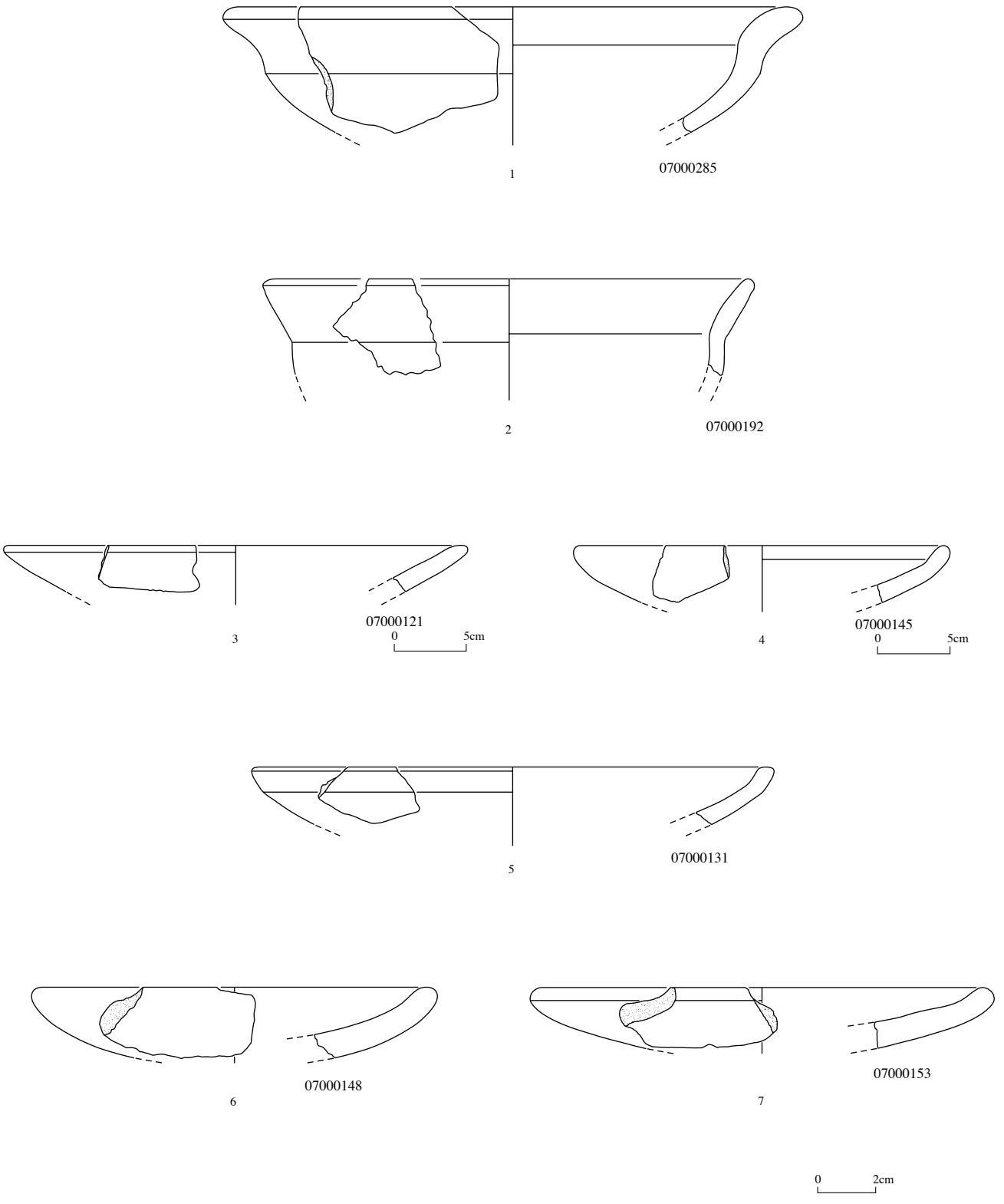

Fig. 31 Pottery shards of 1st Millennium B.C. 1-2: Bowls with S-profile; 3-7: Bowls with straight wall

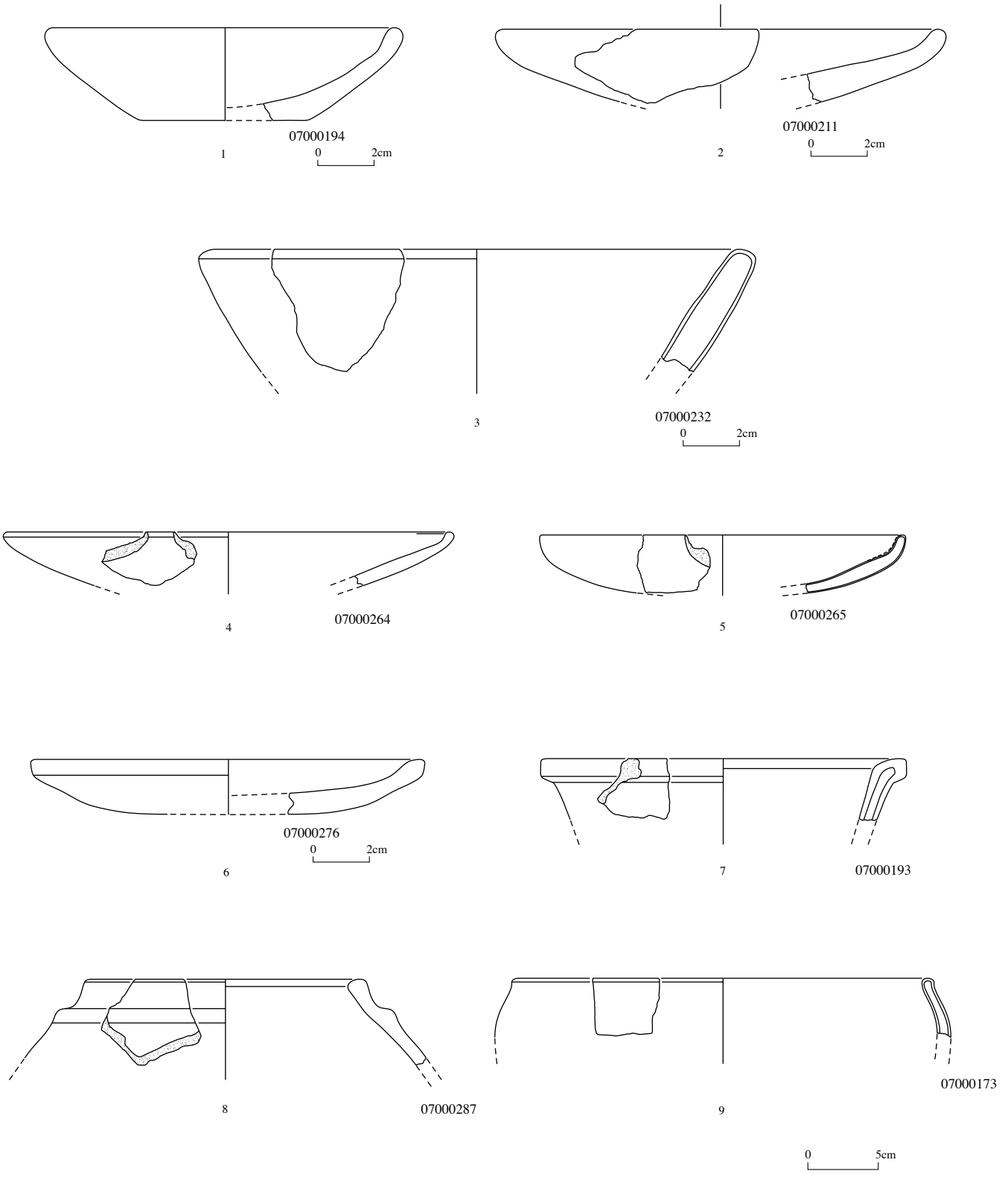

Fig. 32 Pottery shards of 1st Millennium B.C. 1-7: Bowls with straight wall; 8-9: Jars without neck

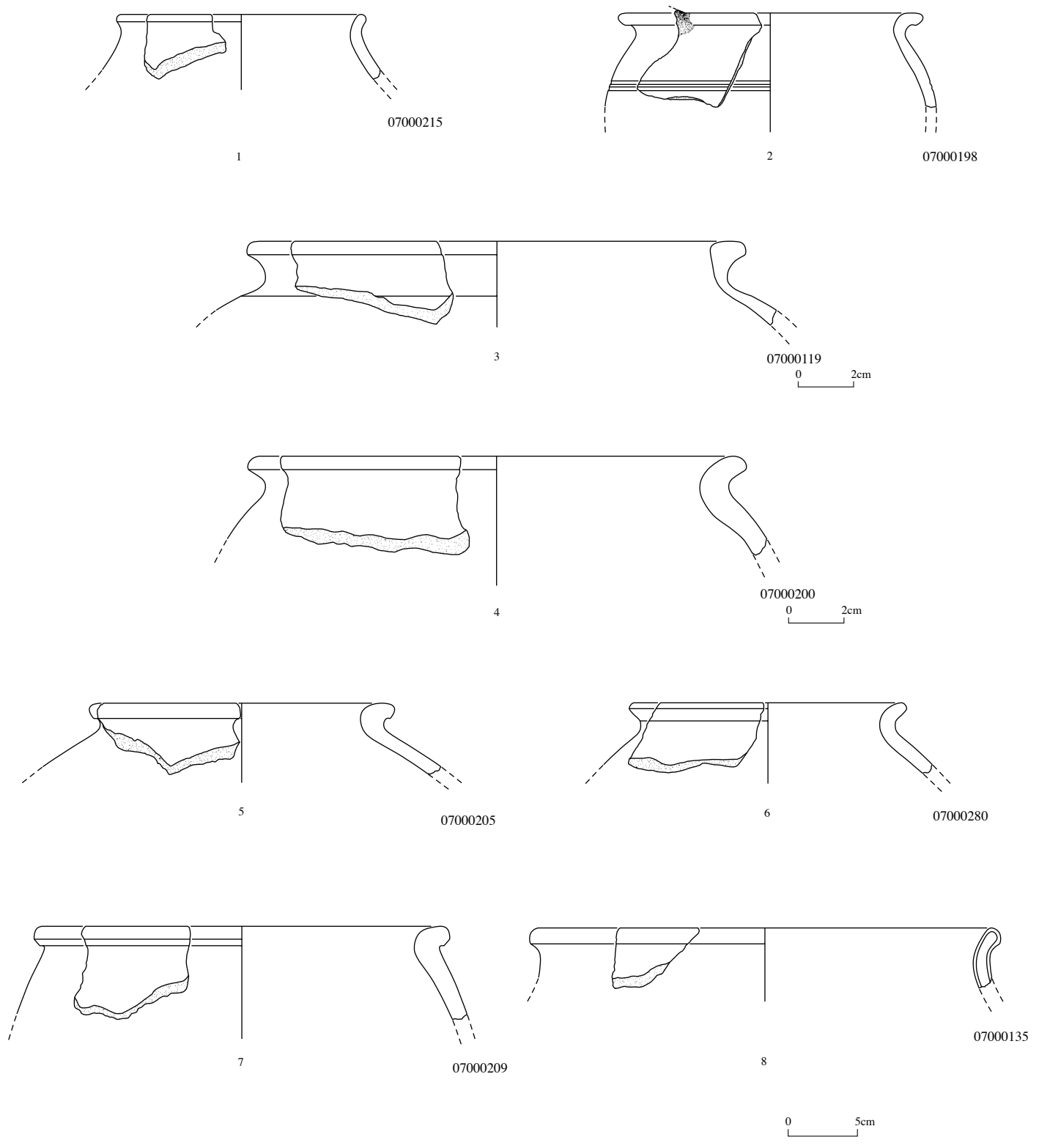

Fig. 33 Pottery shards of 1st Millennium B.C. Jars without neck

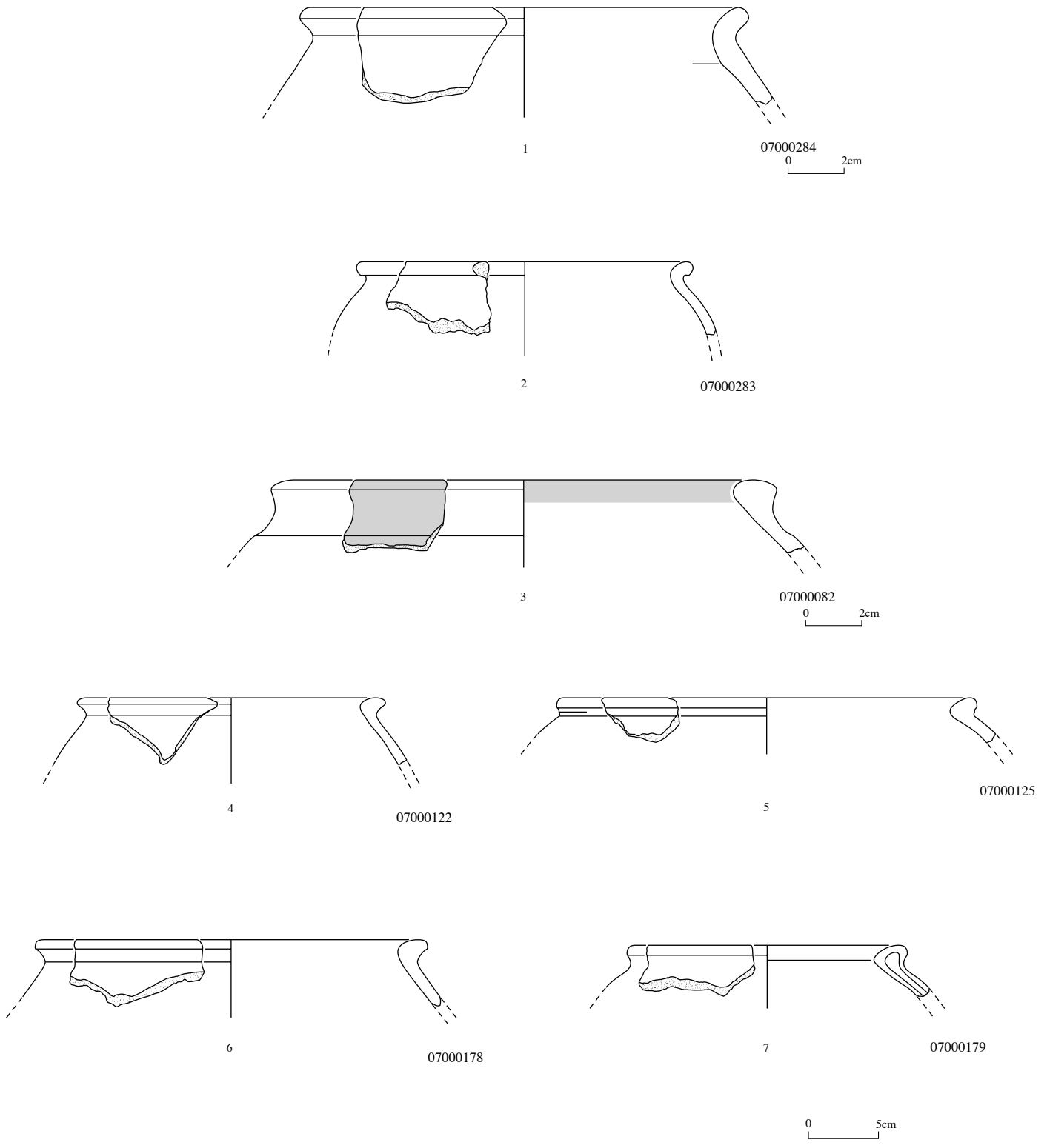

Fig. 34 Pottery shards of 1st Millennium B.C. Jars without neck

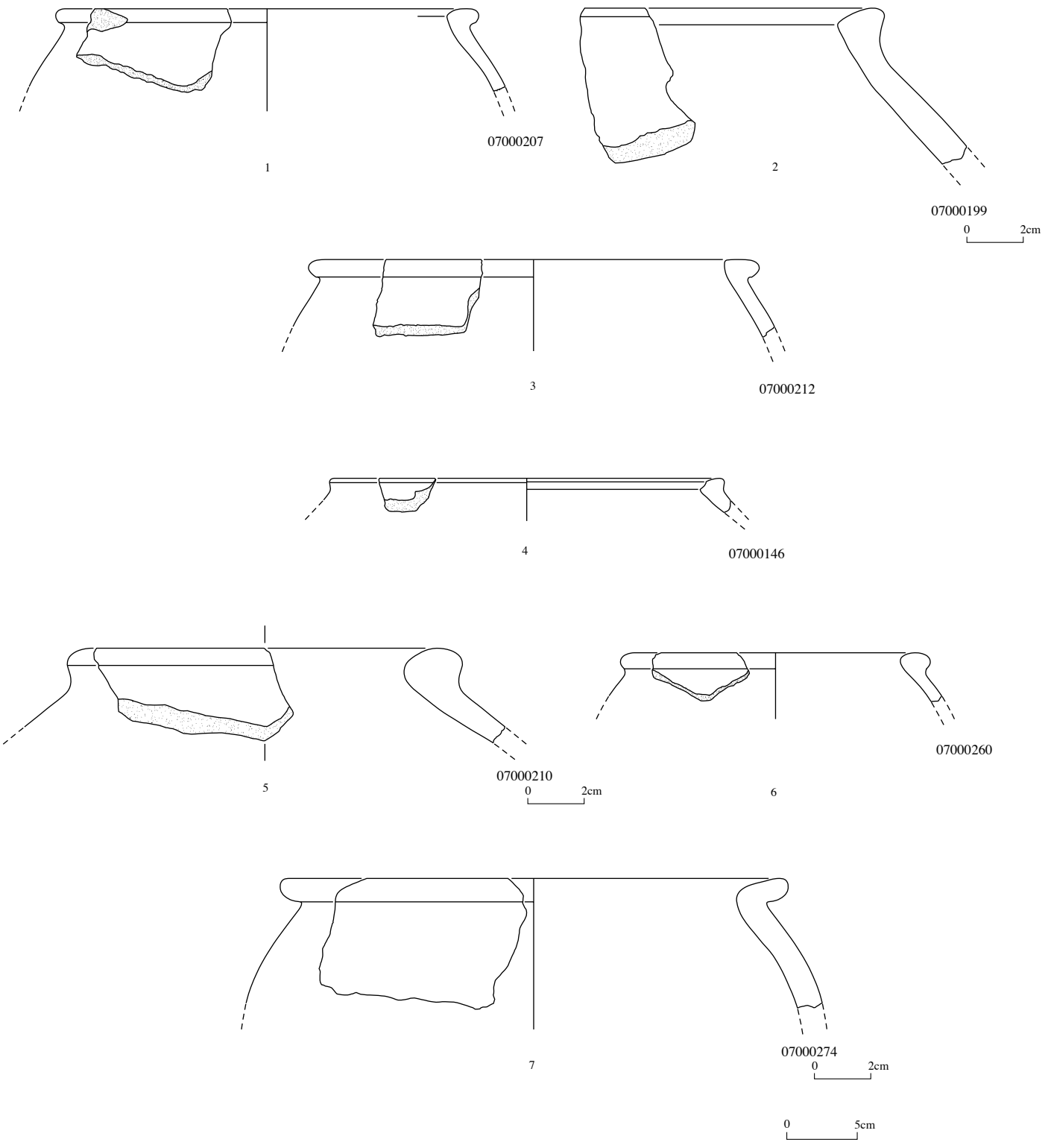

Fig. 35 Pottery shards of 1st Millennium B.C. Jars without neck

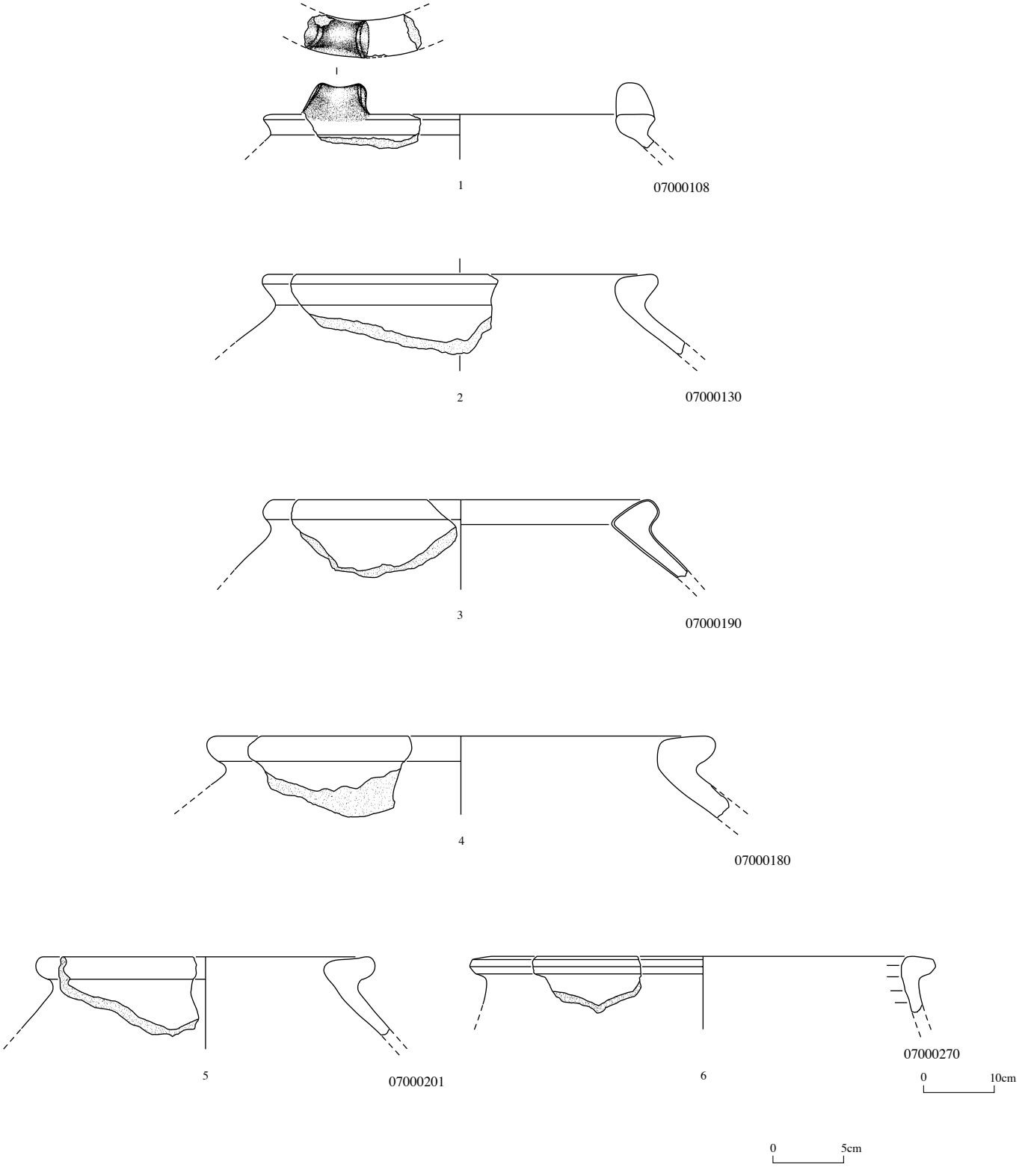

Fig. 36 Pottery shards of 1st Millennium B.C. Jars without neck

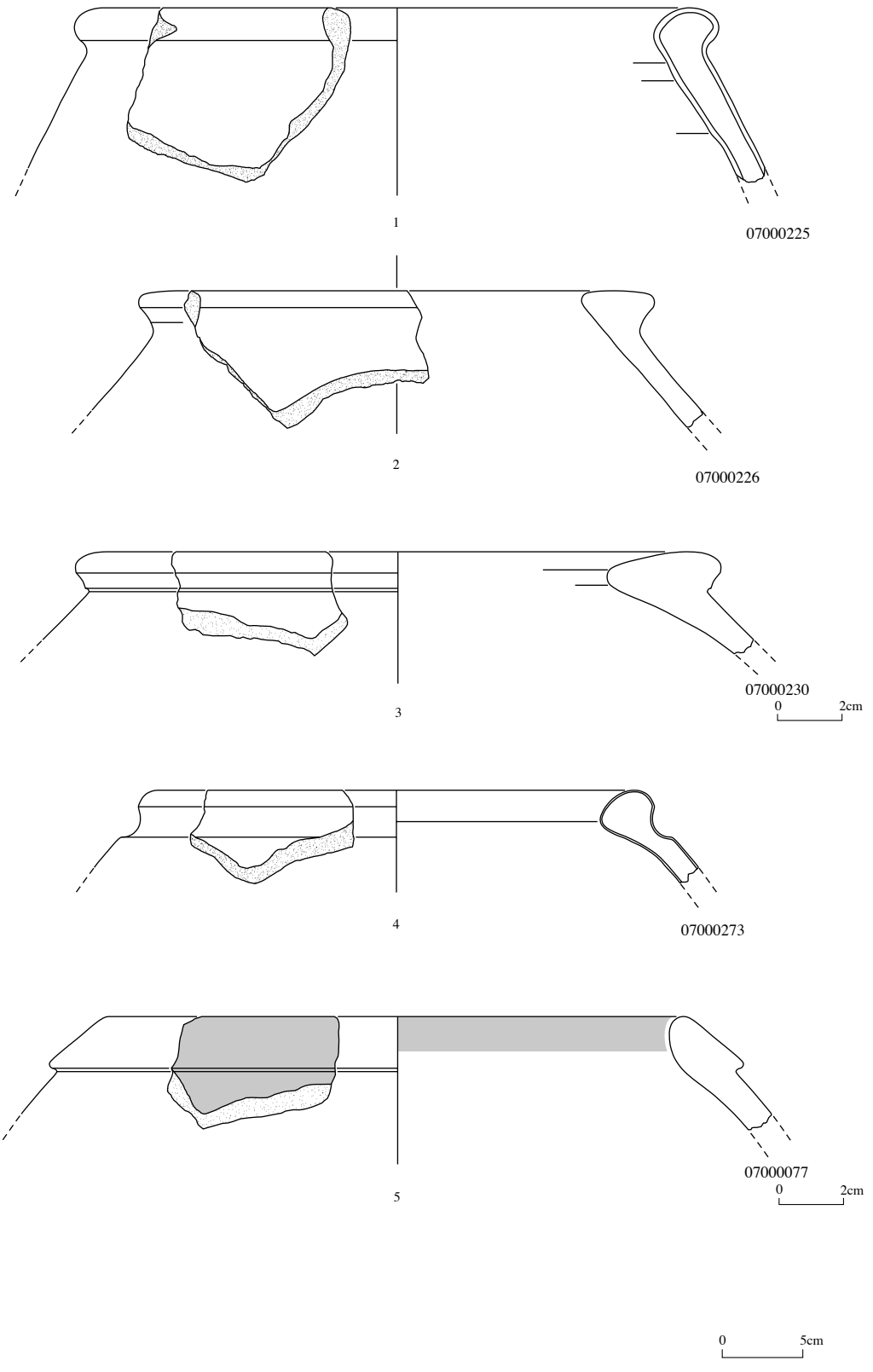

Fig. 37 Pottery shards of 1st Millennium B.C. Jars without neck

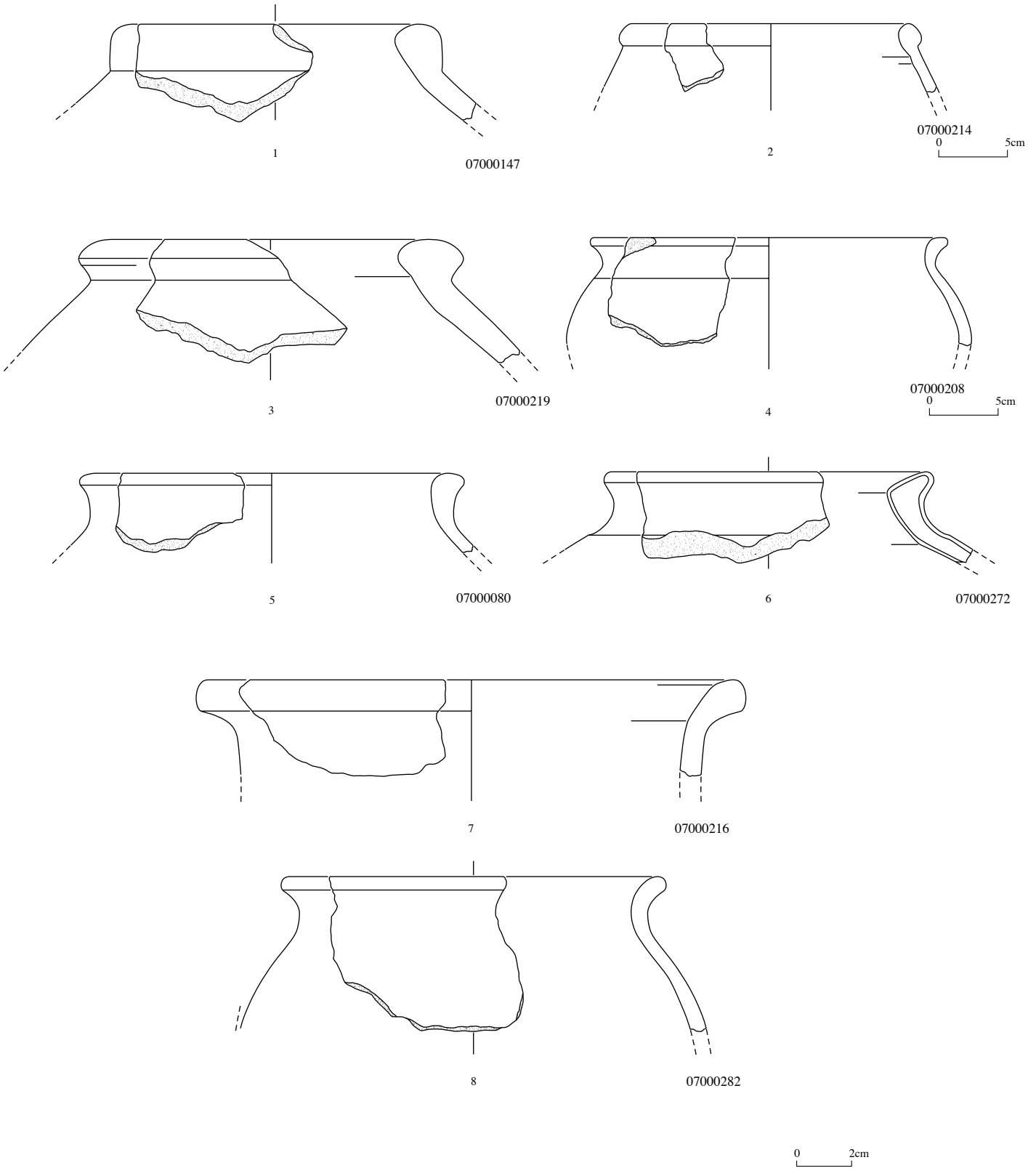

Fig. 38 Pottery shards of 1st Millennium B.C. 1-3: Jars without neck; 4-8: Jars with collar

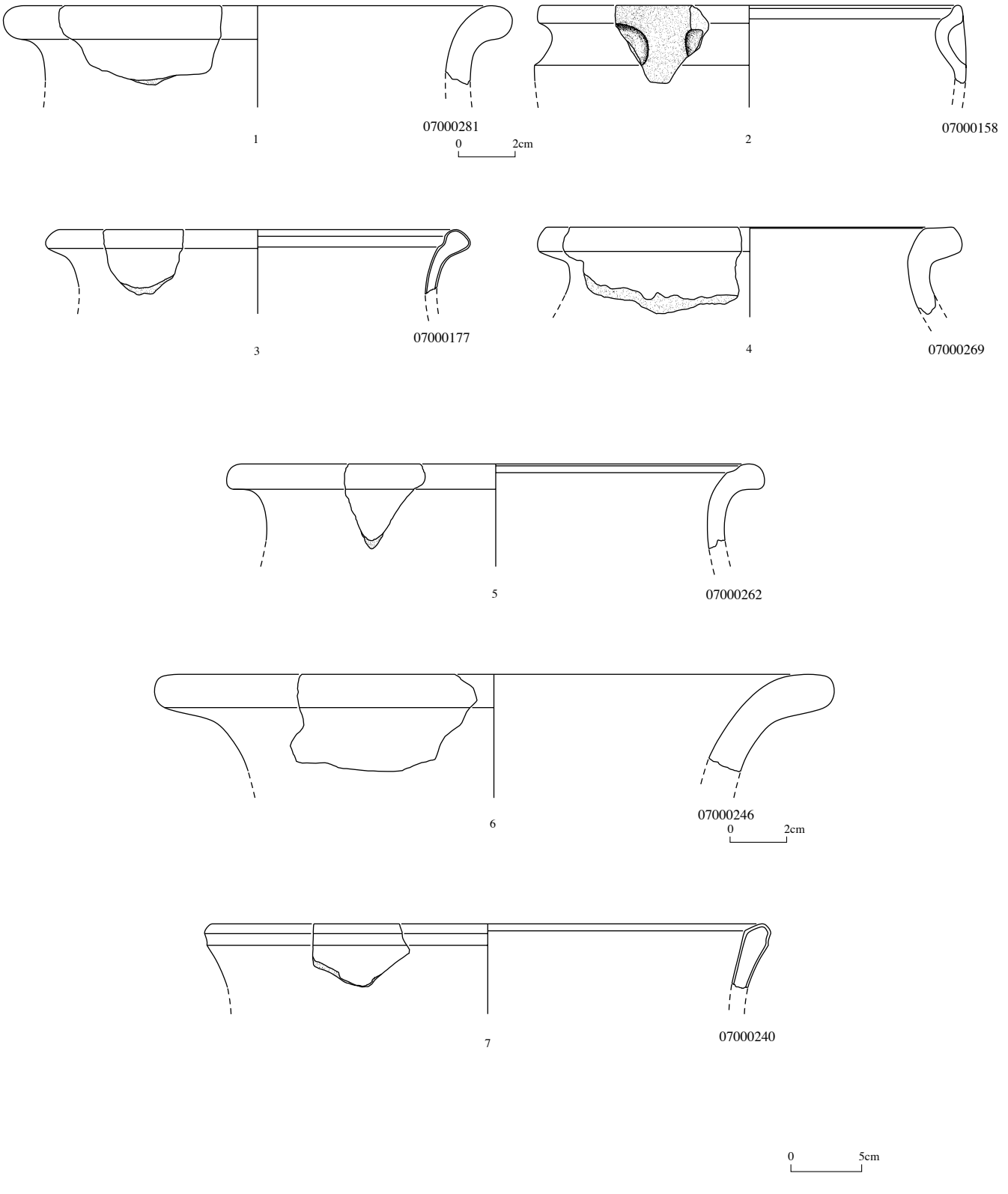

Fig. 39 Pottery shards of 1st Millennium B.C. 1-2: Jars with collar; 3-7: Jars with short neck

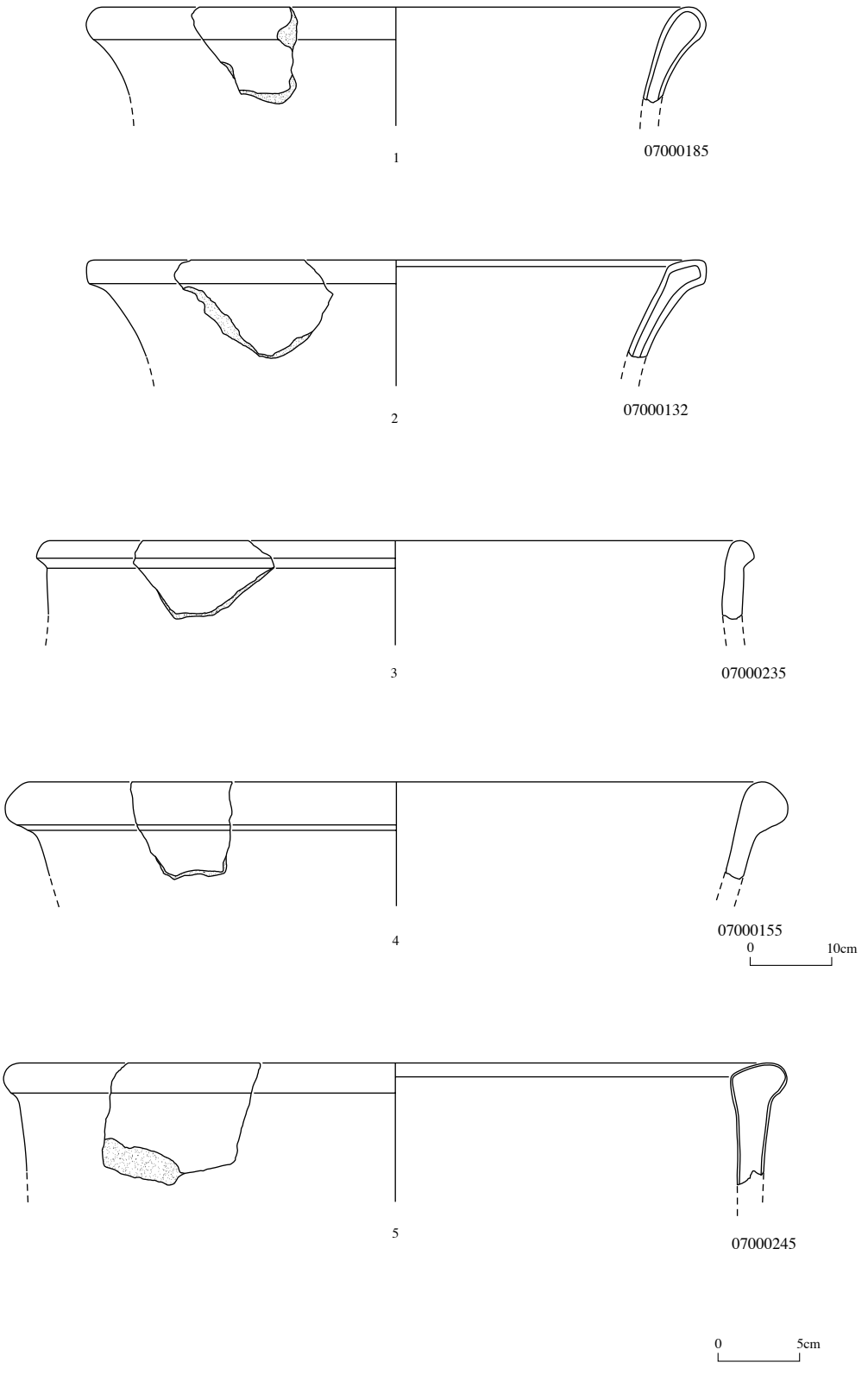

Fig. 40 Pottery shards of 1st Millennium B.C. Jars with neck

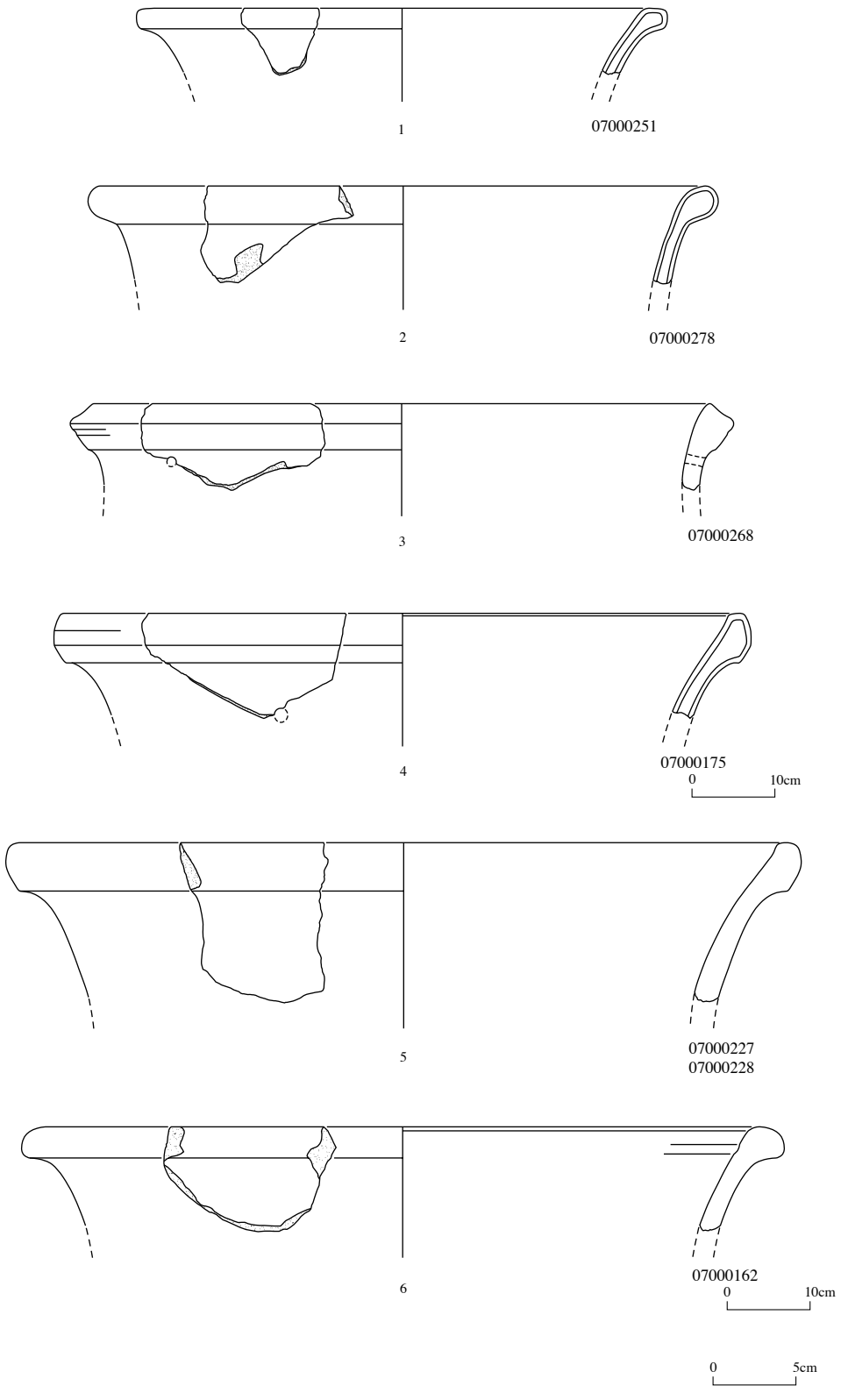

Fig. 41 Pottery shards of 1st Millennium B.C. Jars with neck

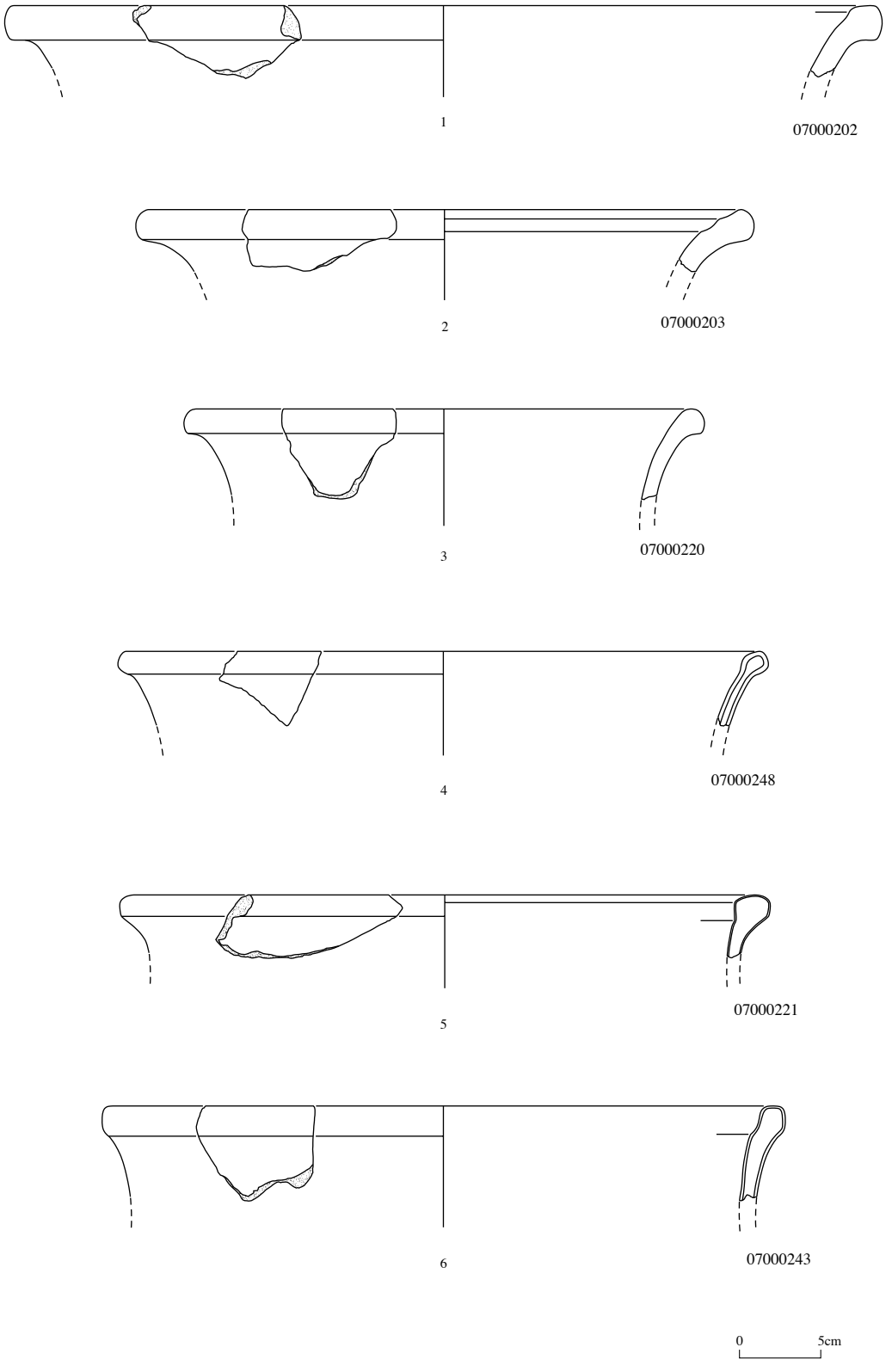

Fig. 42 Pottery shards of 1st Millennium B.C. Jars with neck

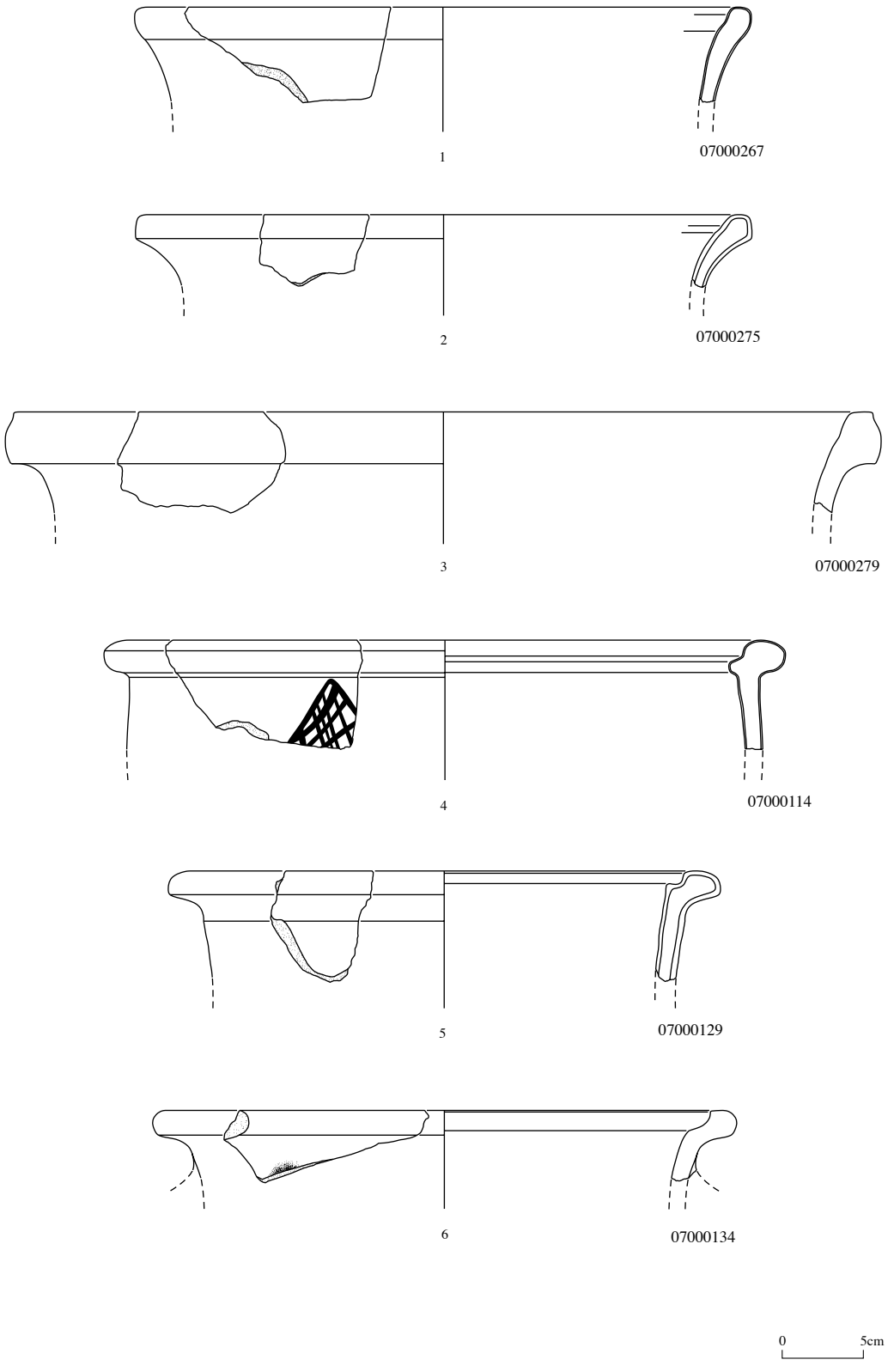

Fig. 43 Pottery shards of 1st Millennium B.C. 1-3: Jars with neck; 4-6: Jars with wide neck and pedestal (Krater)

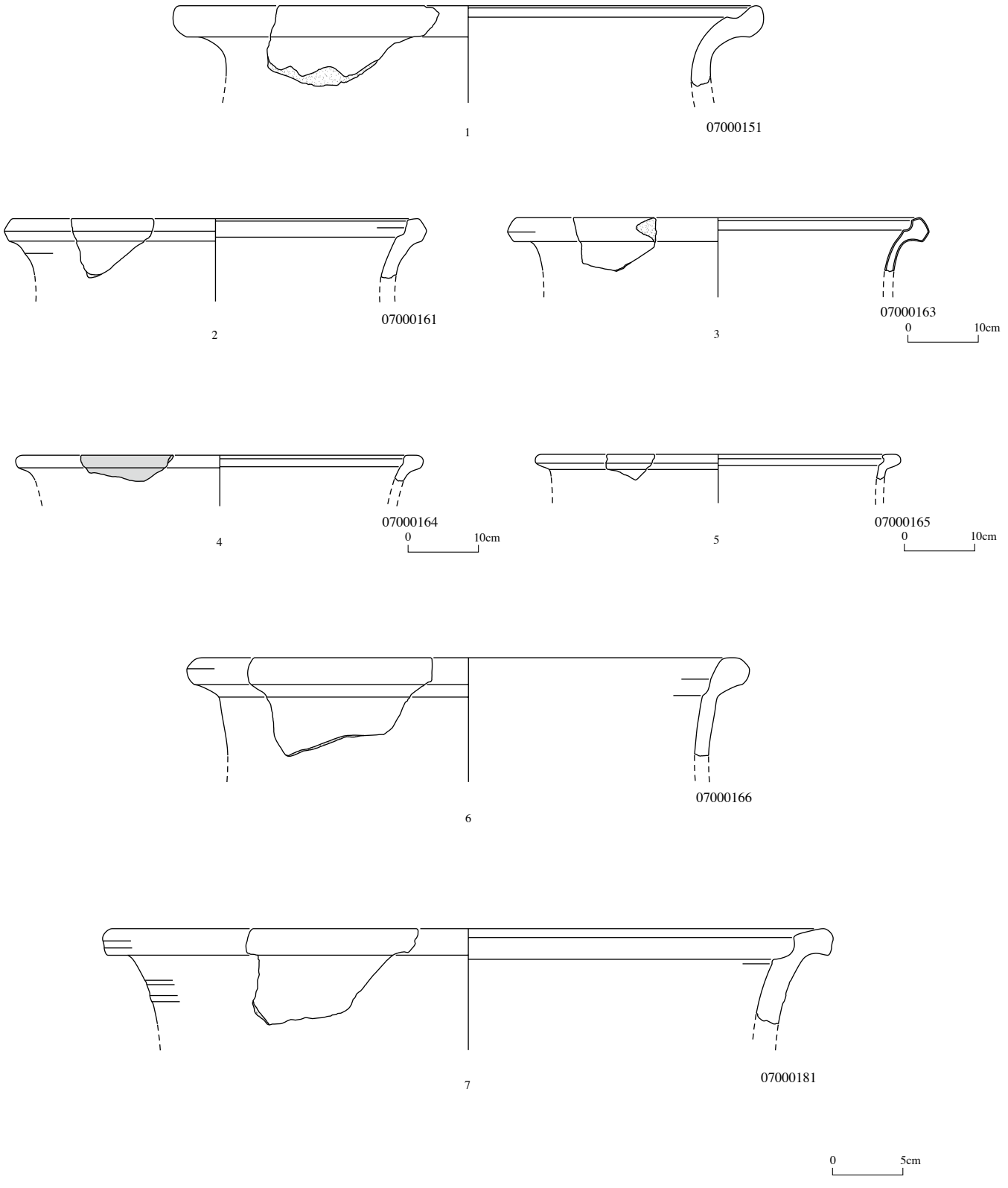

Fig. 44 Pottery shards of 1st Millennium B.C. Jars with wide neck and pedestal (Krater)

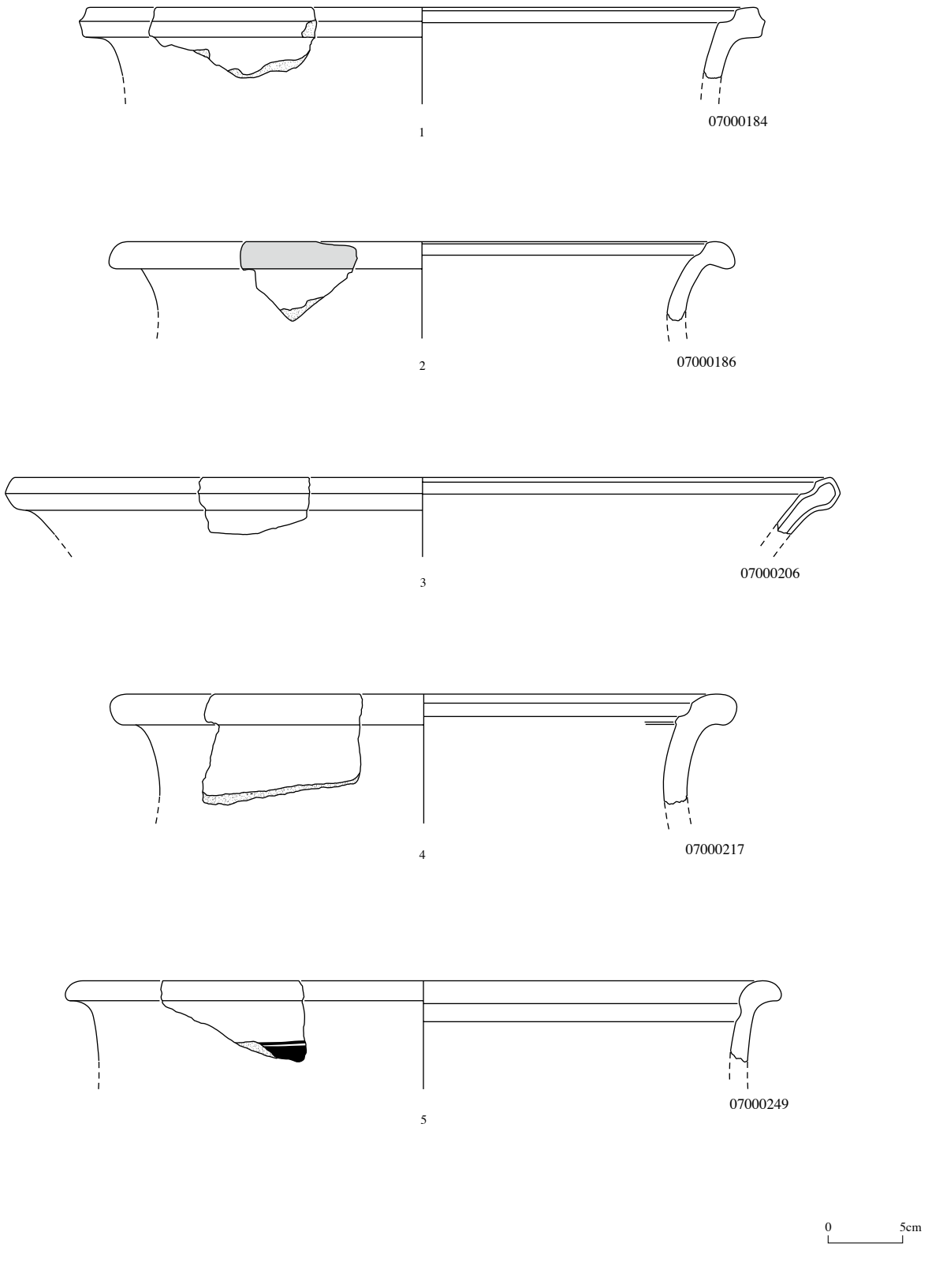

Fig. 45 Pottery shards of 1st Millennium B.C. Jars with wide neck and pedestal (Krater)

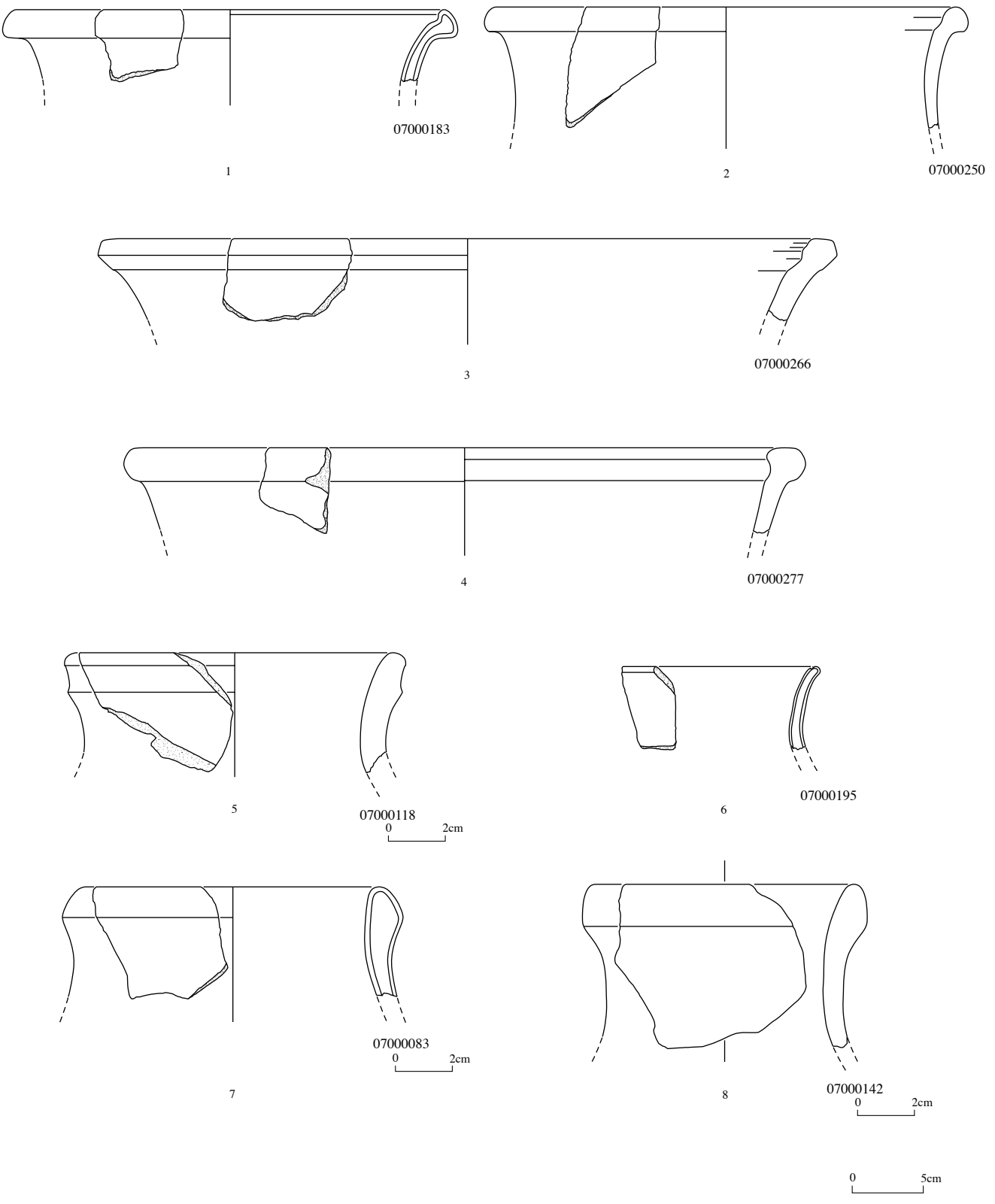

Fig. 46 Pottery shards of 1st Millennium B.C. 1-4: Jars with wide neck and pedestal (Krater); 5-8: Jars/bottles with narrow and long neck

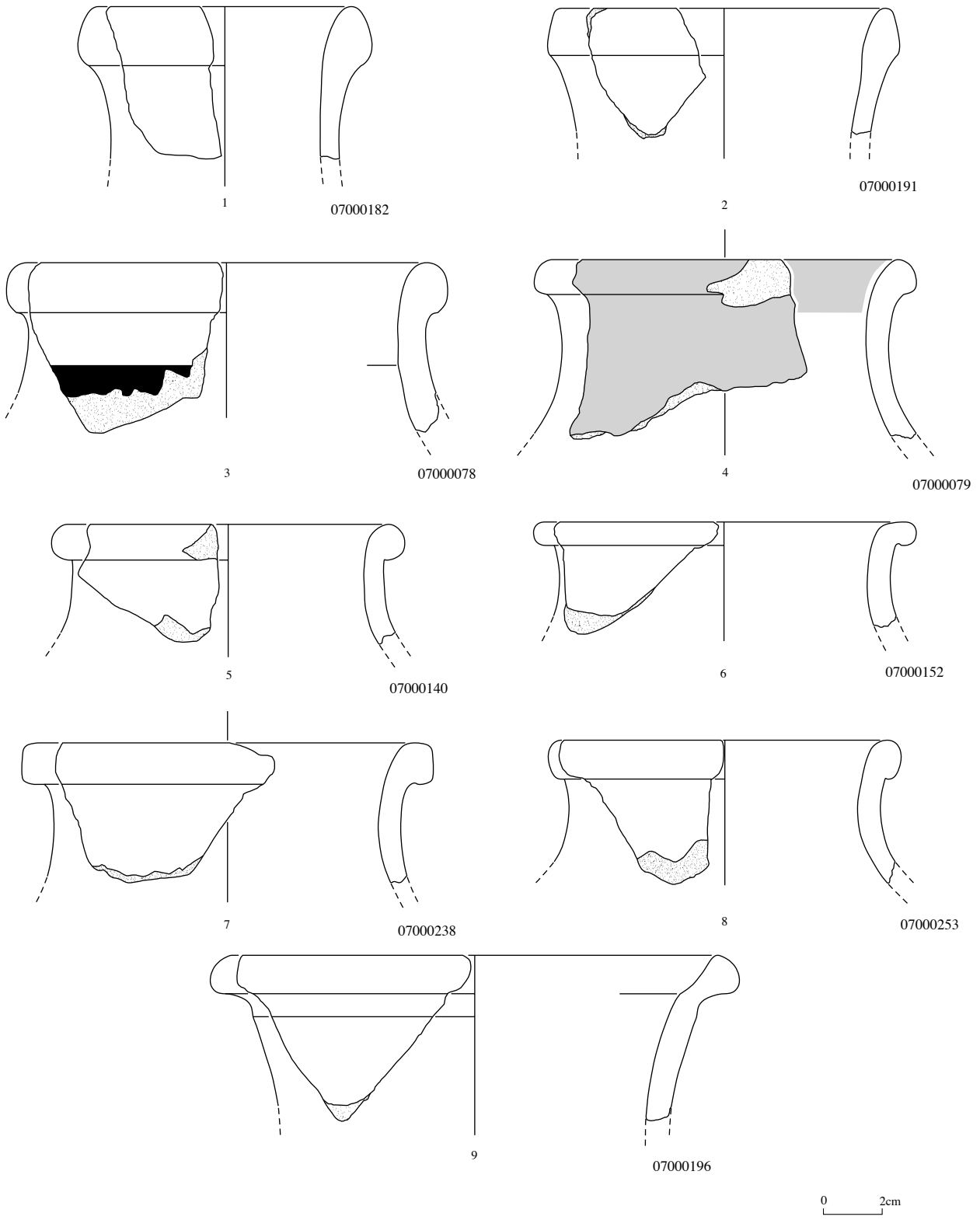

Fig. 47 Pottery shards of 1st Millennium B.C. Jars/bottles with narrow and long neck

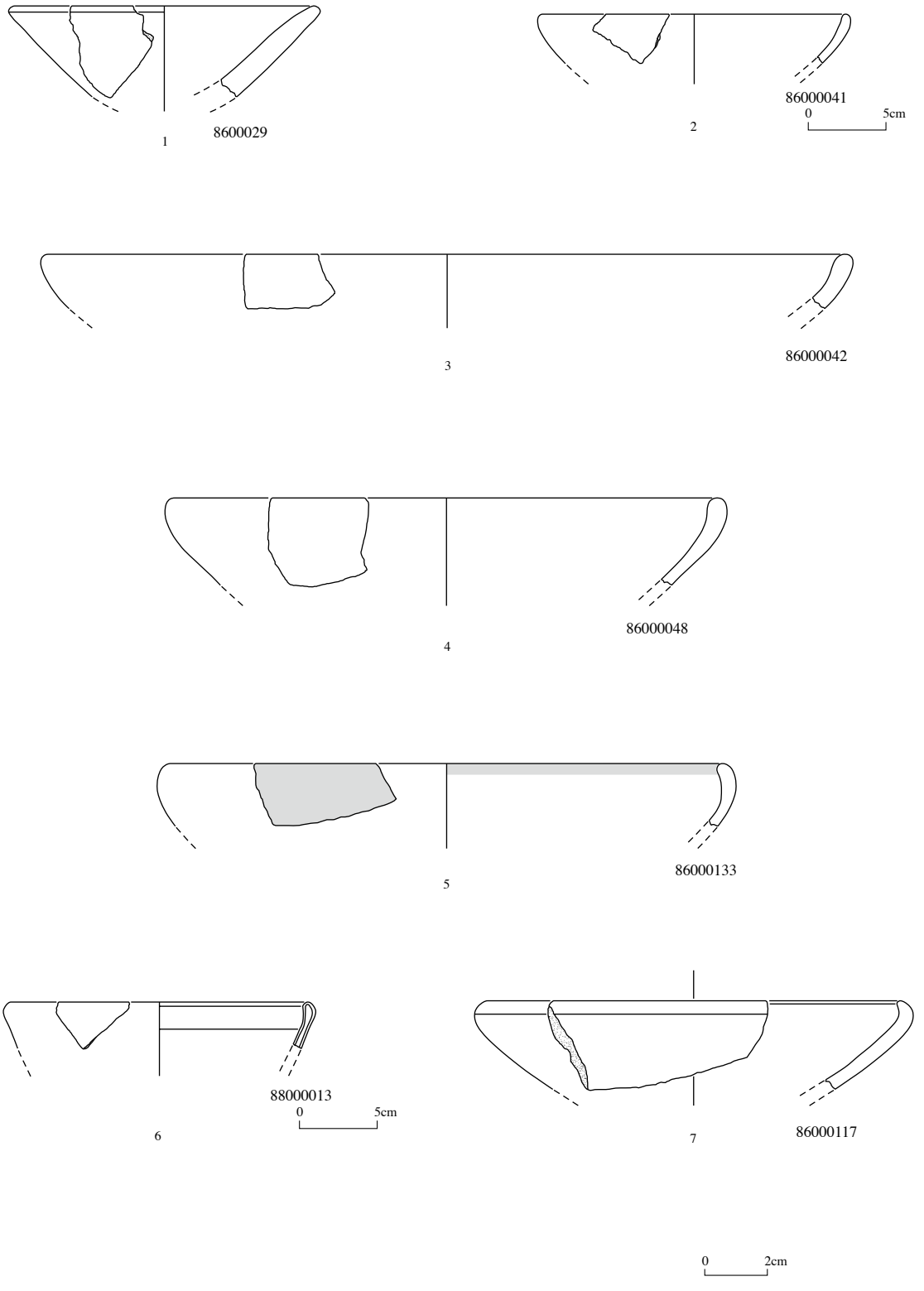

Fig. 48 Pottery shards of 2nd Millennium B.C. Round bowls

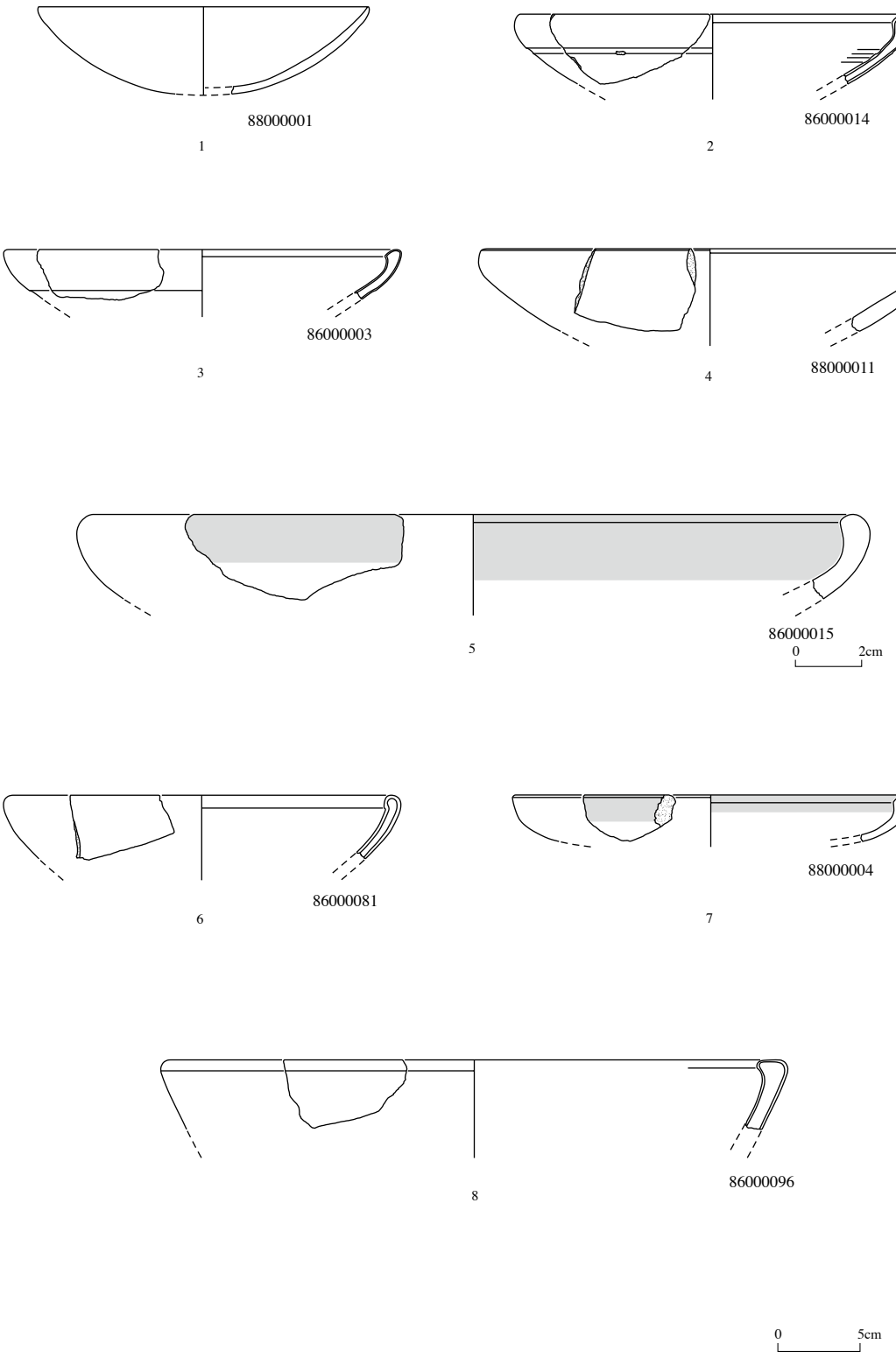

Fig. 49 Pottery shards of 2nd Millennium B.C. Round bowls

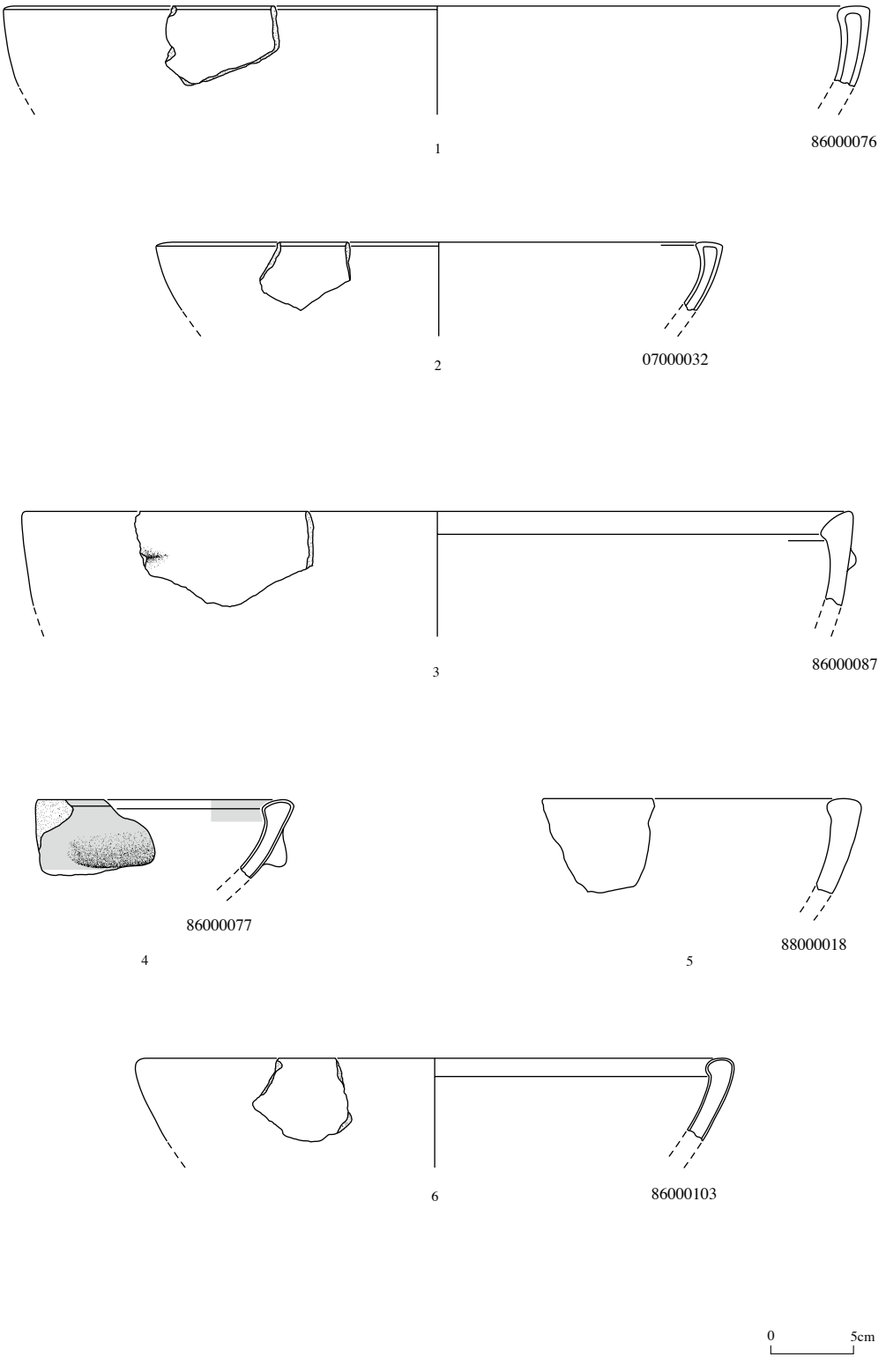

Fig. 50 Pottery shards of 2nd Millennium B.C. Round bowls

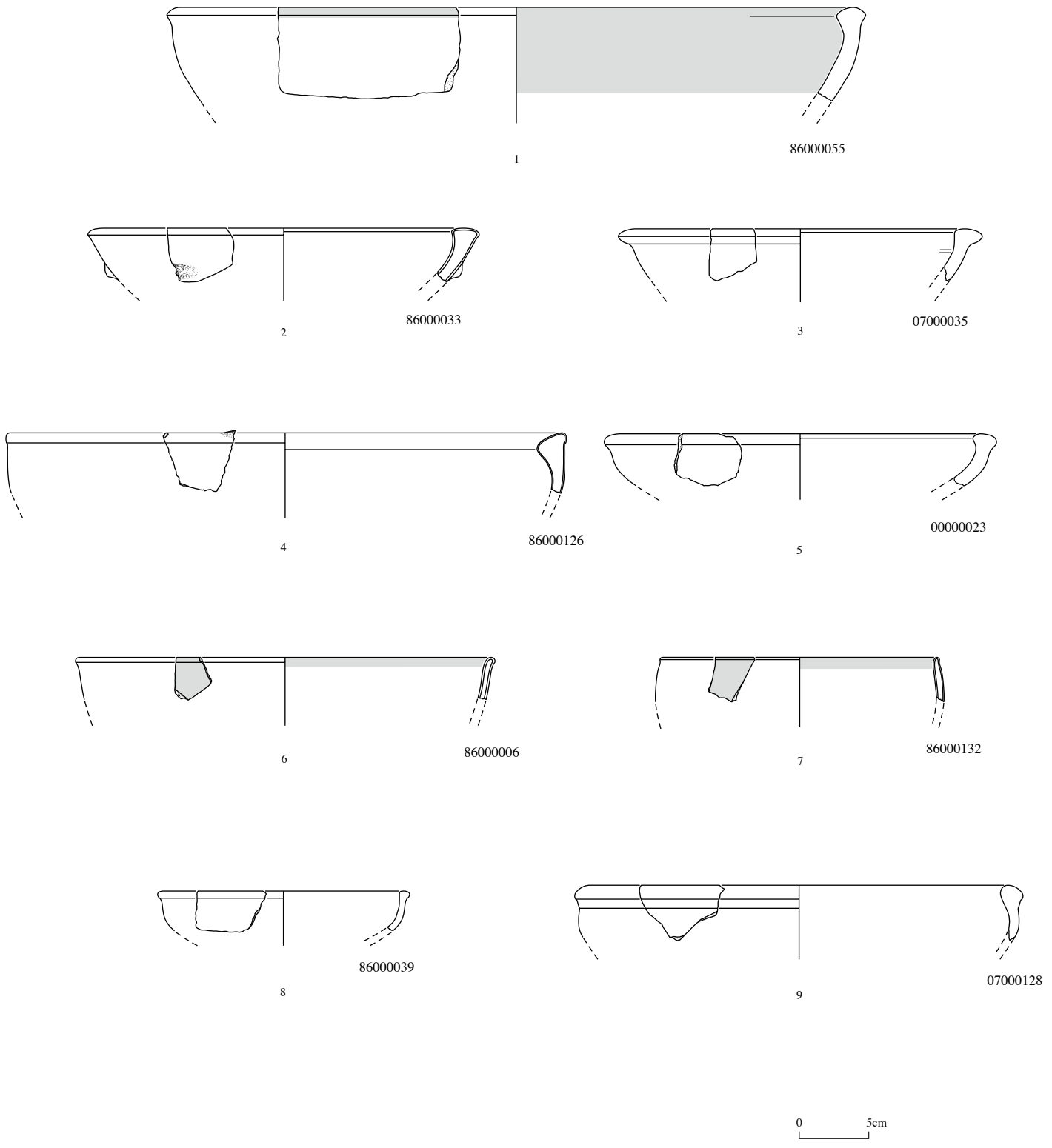

Fig. 51 Pottery shards of 2nd Millennium B.C. Round bowls

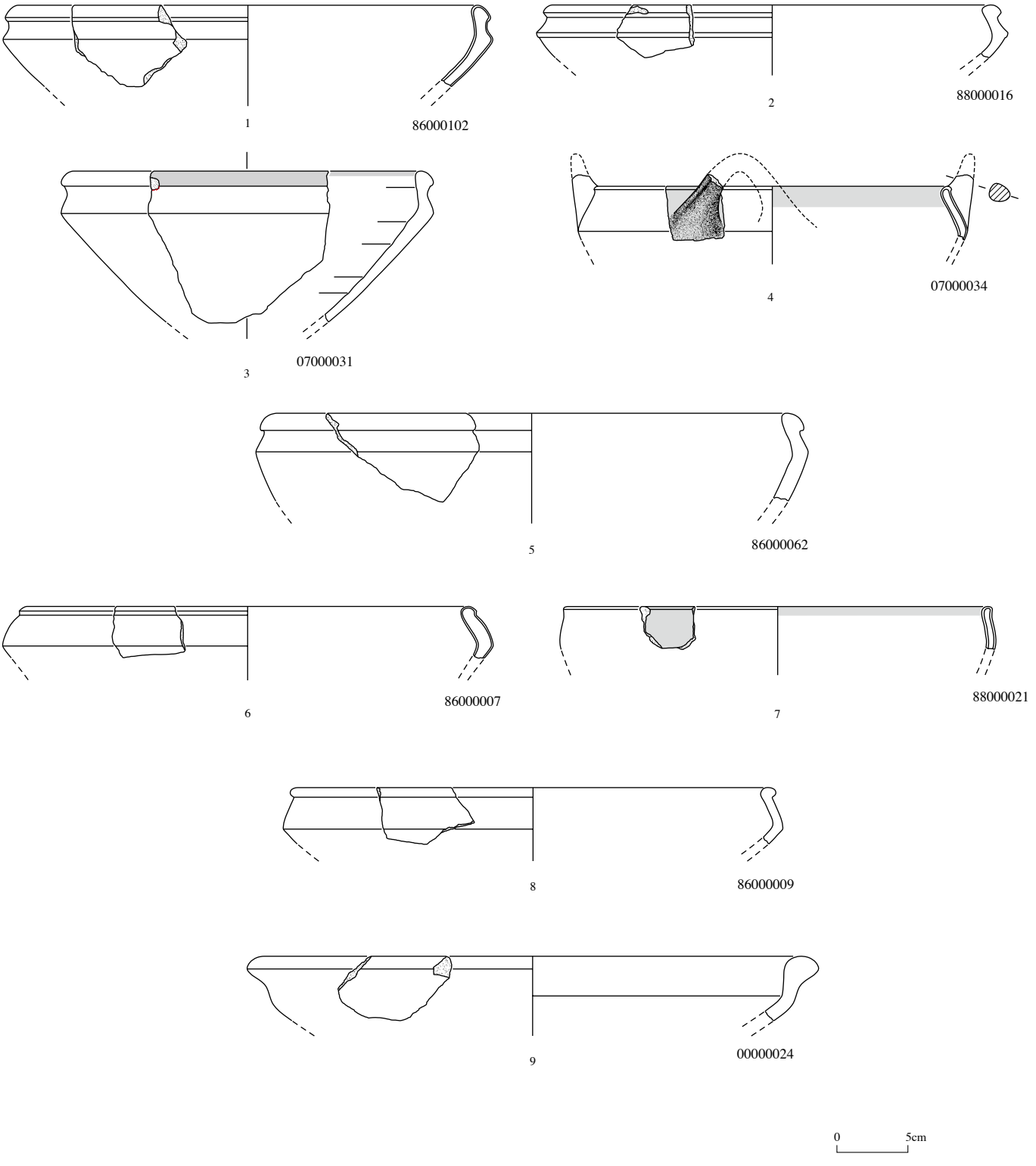

Fig. 52 Pottery shards of 2nd Millennium B.C. Bowls with carination

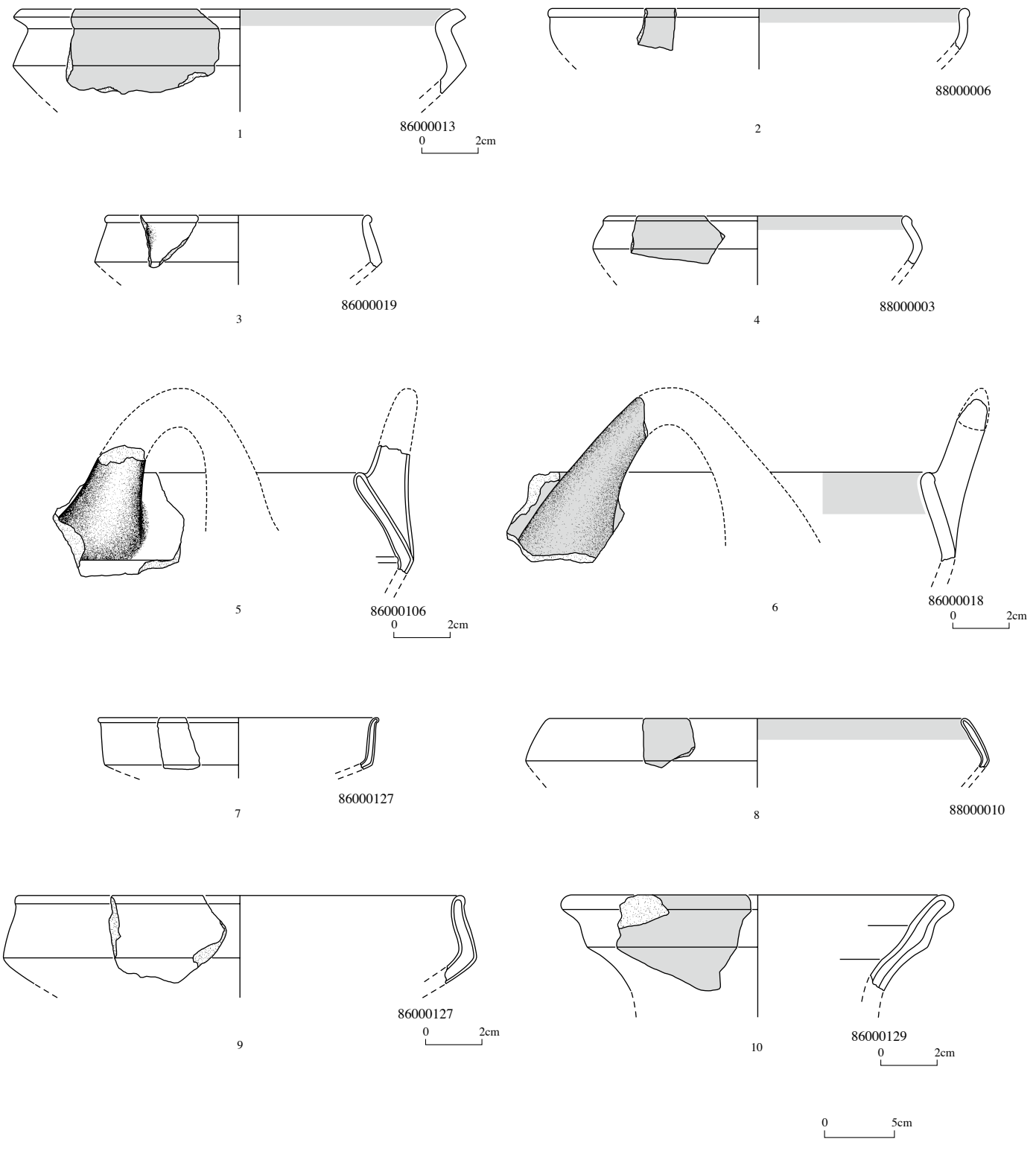

Fig. 53 Pottery shards of 2nd Millennium B.C. Bowls with carination

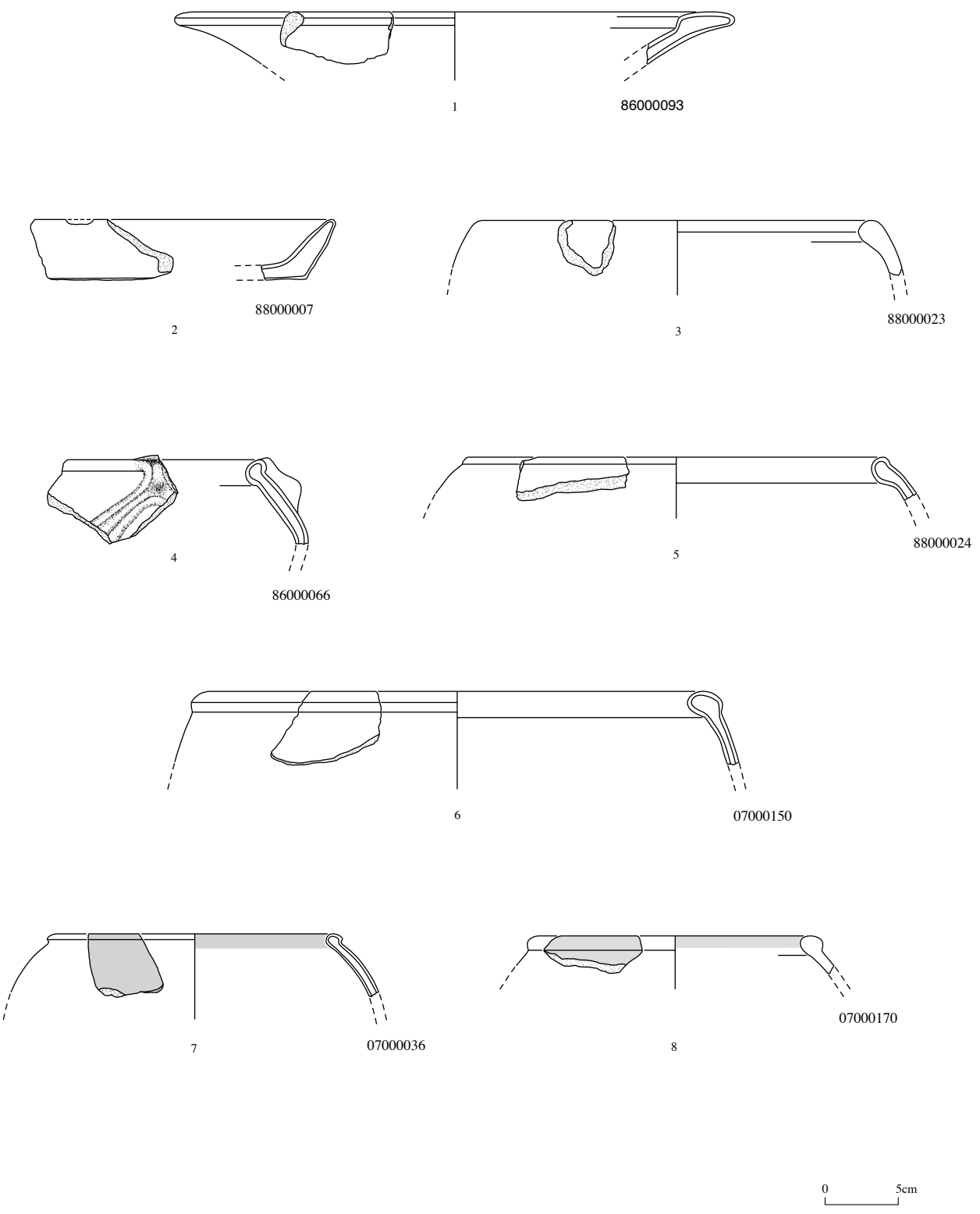

Fig. 54 Pottery shards of 2nd Millennium B.C. 1-2: Shallow bowls; 3-8: Jars without neck

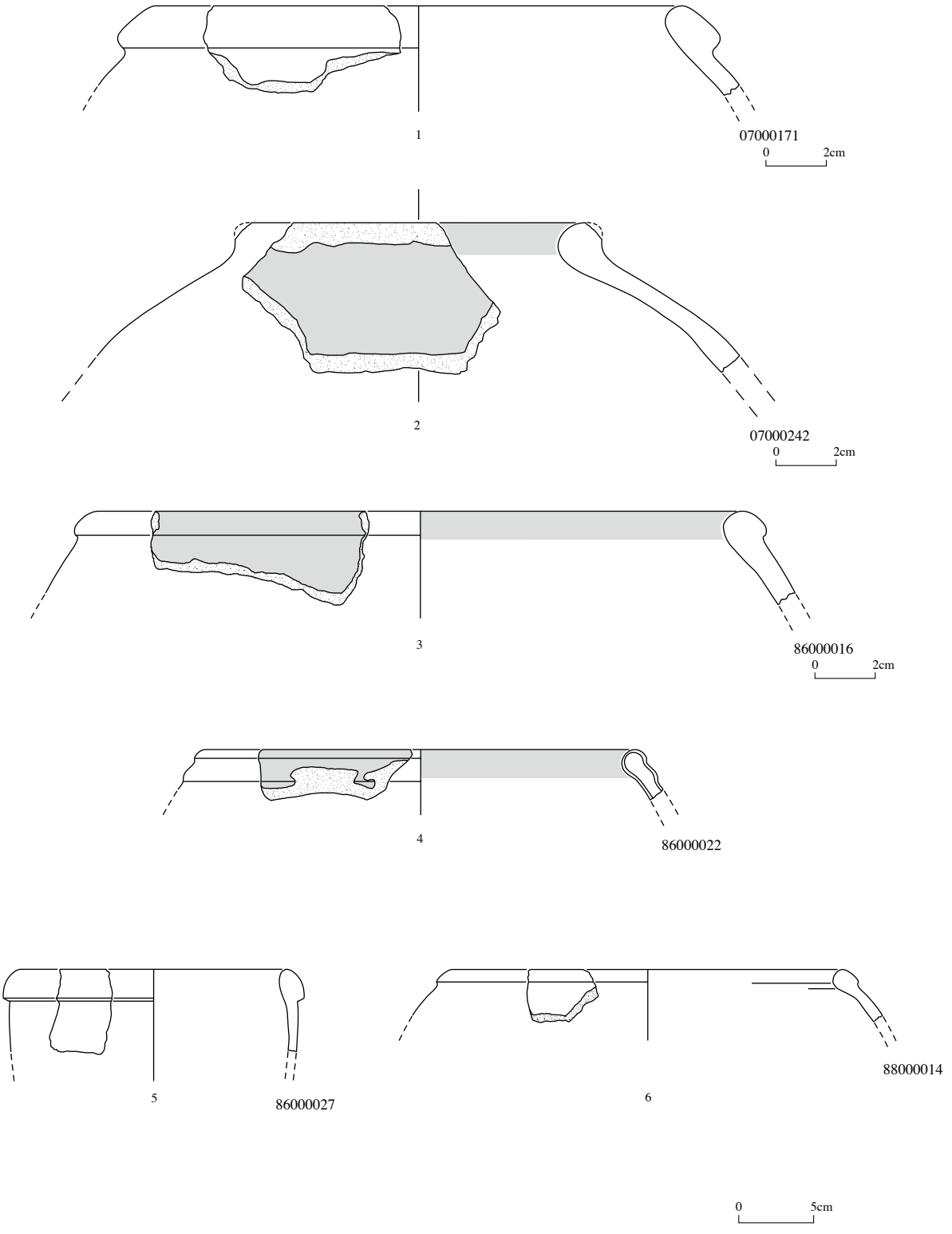

Fig. 55 Pottery shards of 2nd Millennium B.C. Jars without neck

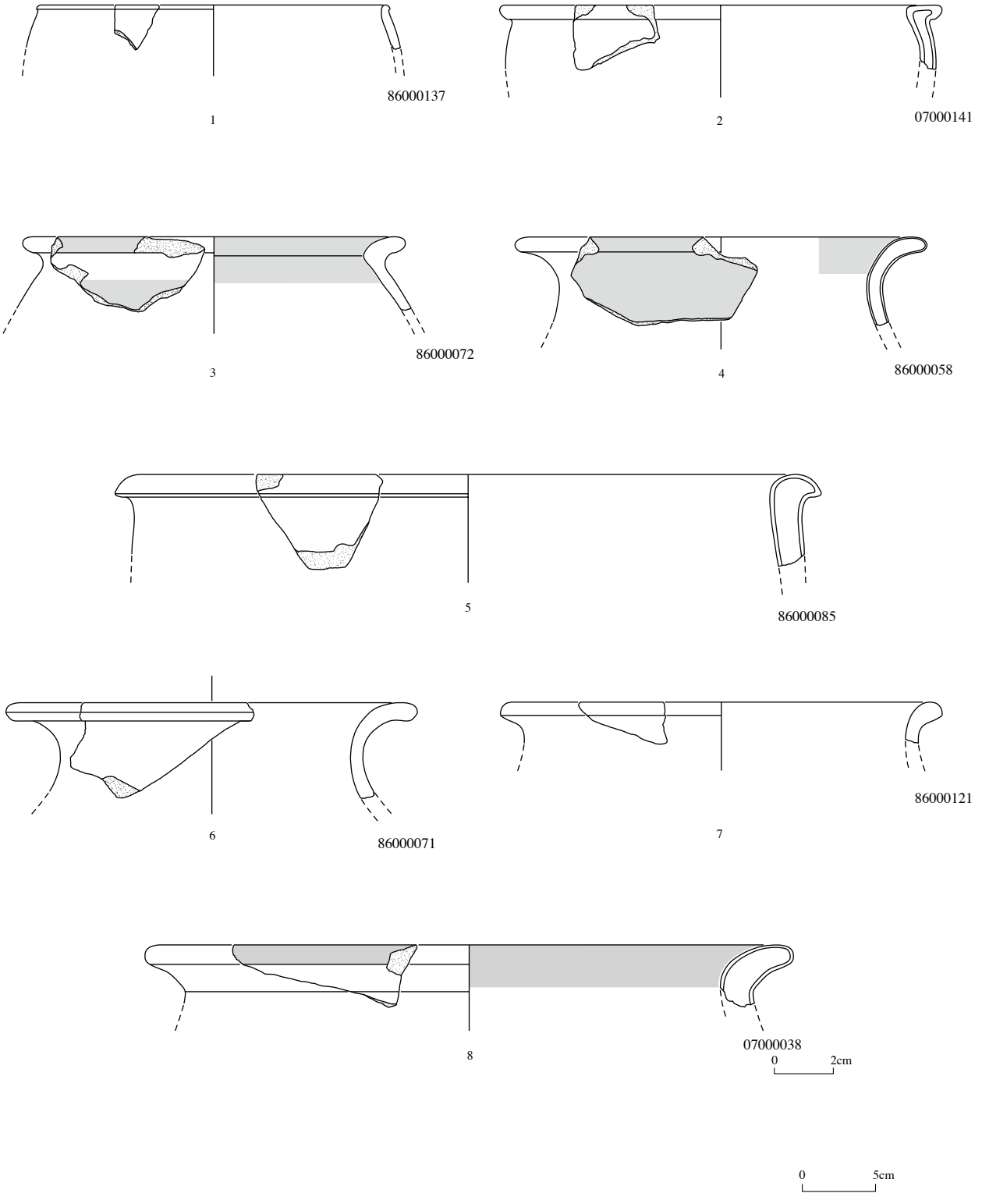

Fig. 56 Pottery shards of 2nd Millennium B.C. Jars without neck

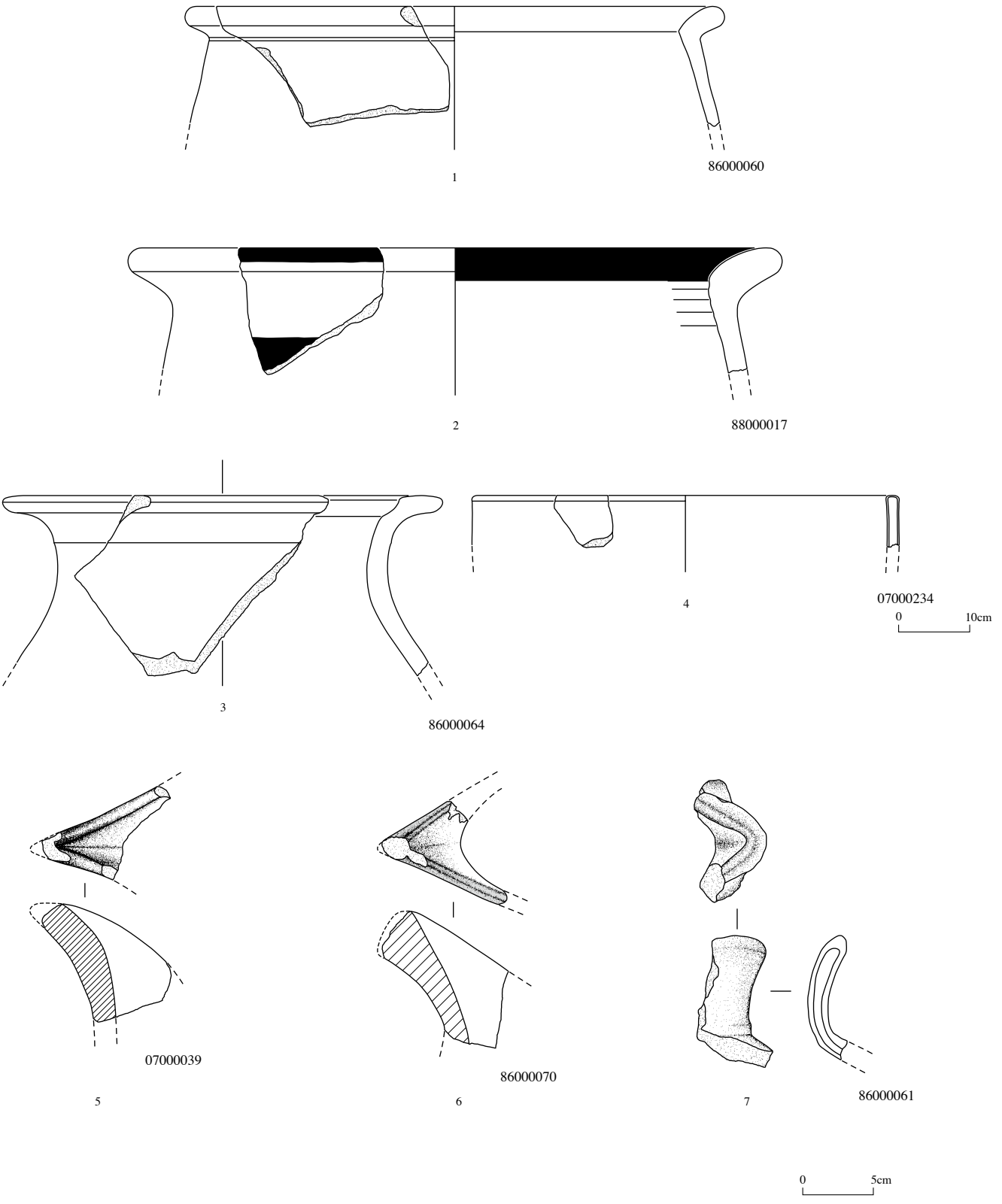

Fig. 57 Pottery shards of 2nd Millennium B.C. 1-2: Jars without neck; 3: Jar with neck; 4: Deep bowl; 5-7: Beak fragments of large jars

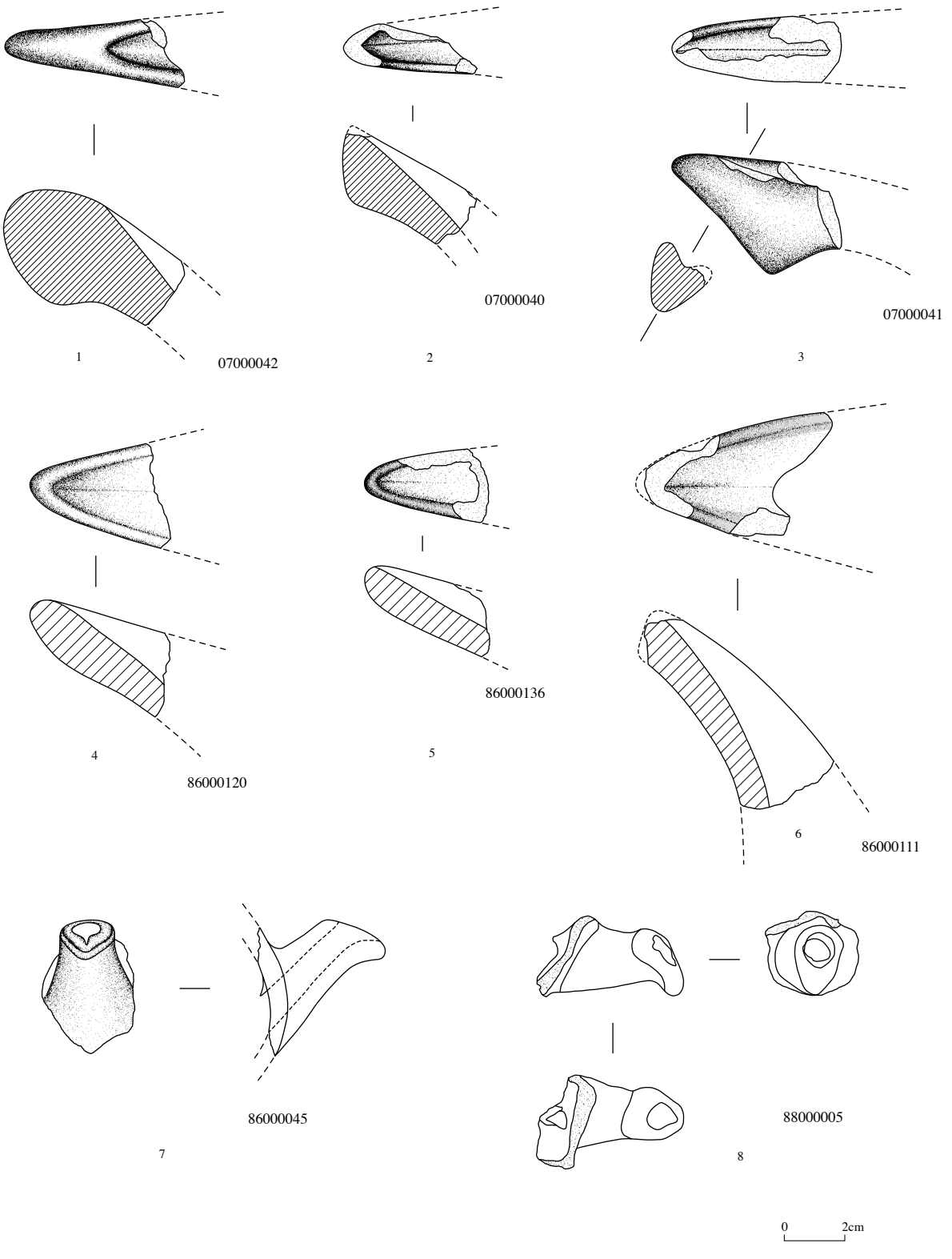

Fig. 58 Pottery shards of 2nd Millennium B.C. 1-6: Beak fragments of pitchers; 7-8: Spouts of tea-pots

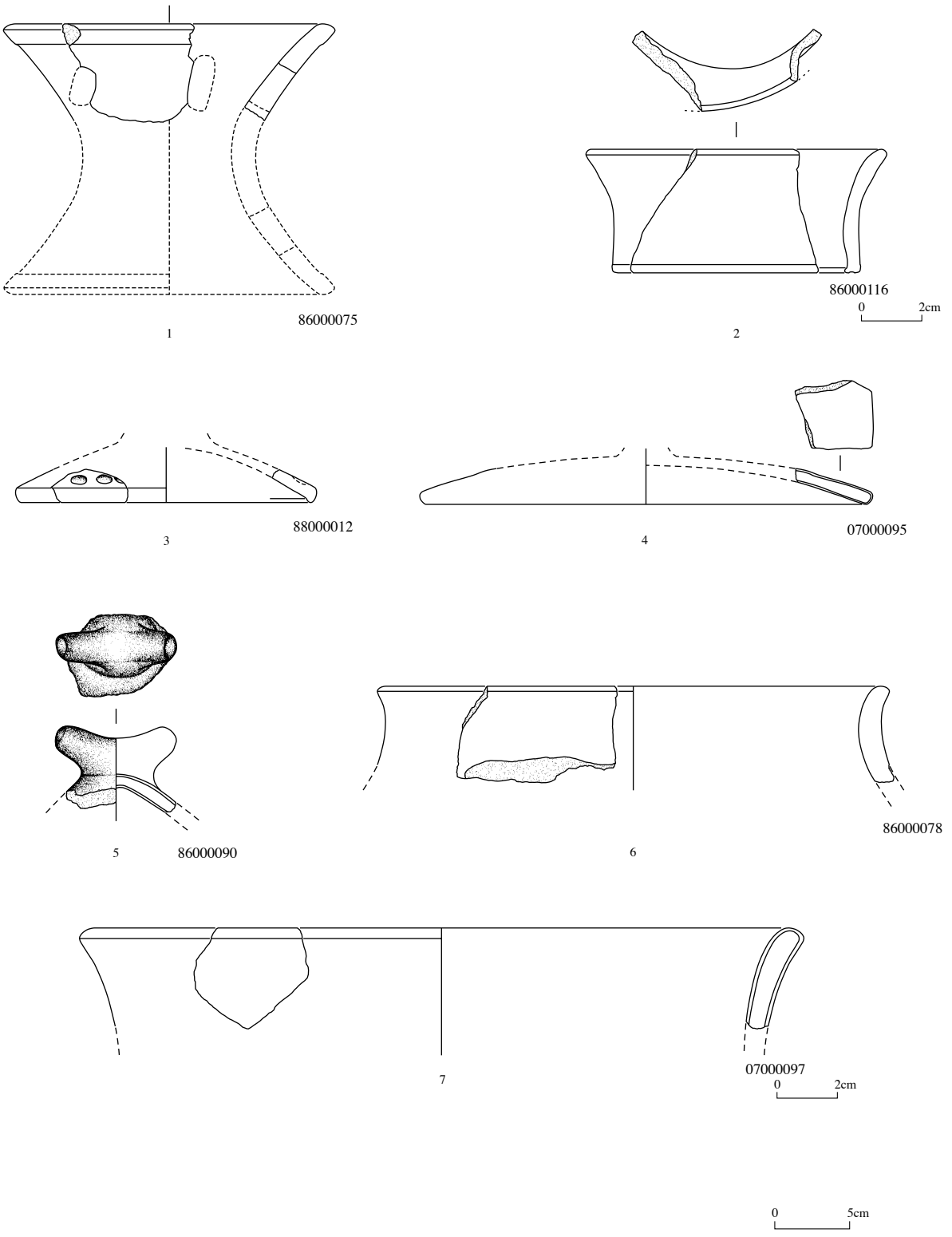

Fig. 59 Pottery shards of 2nd Millennium B.C. 1-2: Pot stands; 3-5: Lids. Pottery shards of 3rd Millennium B.C.; 6-7: Jars with neck

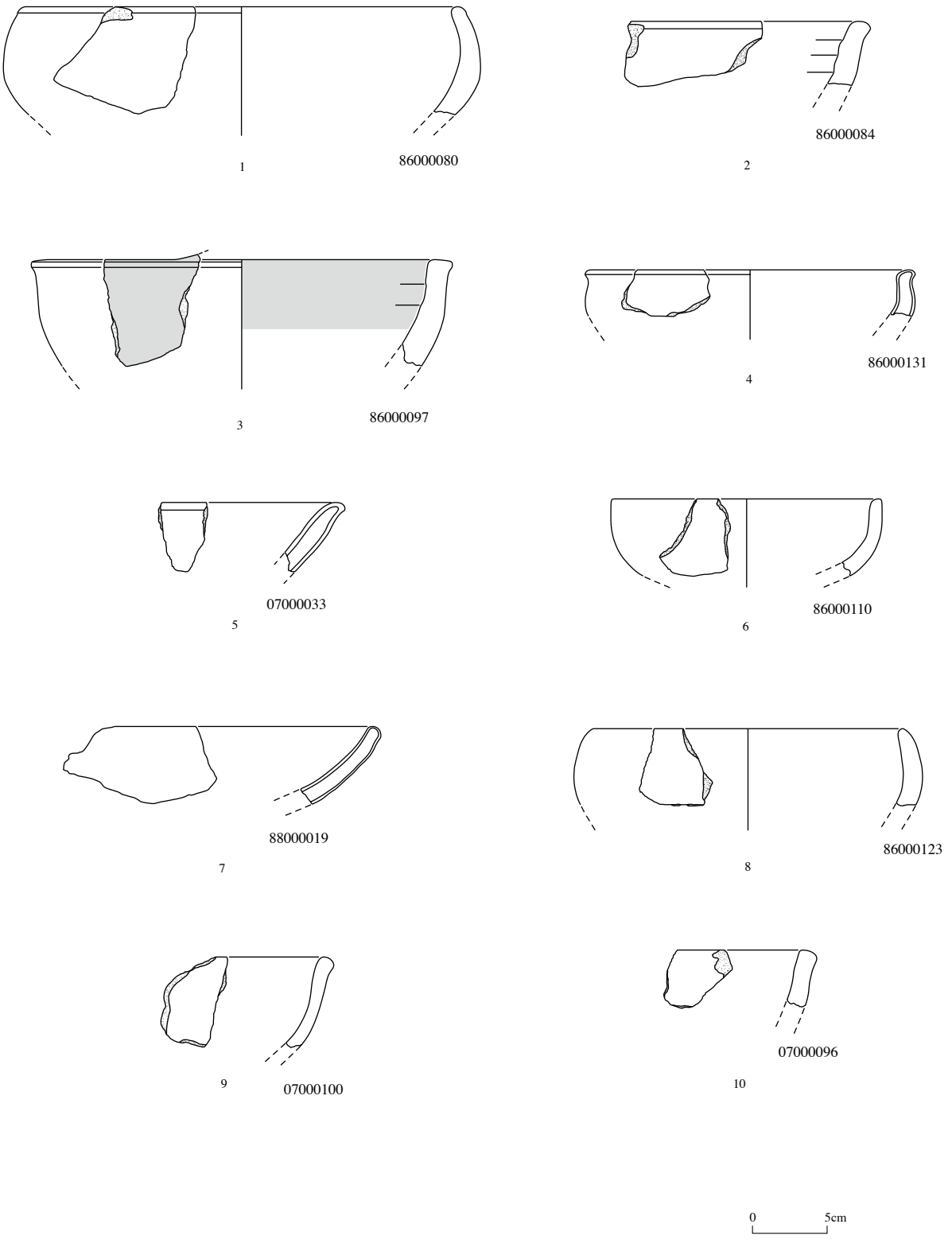

Fig. 60 Pottery shards of 3rd Millennium B.C. Round bowls

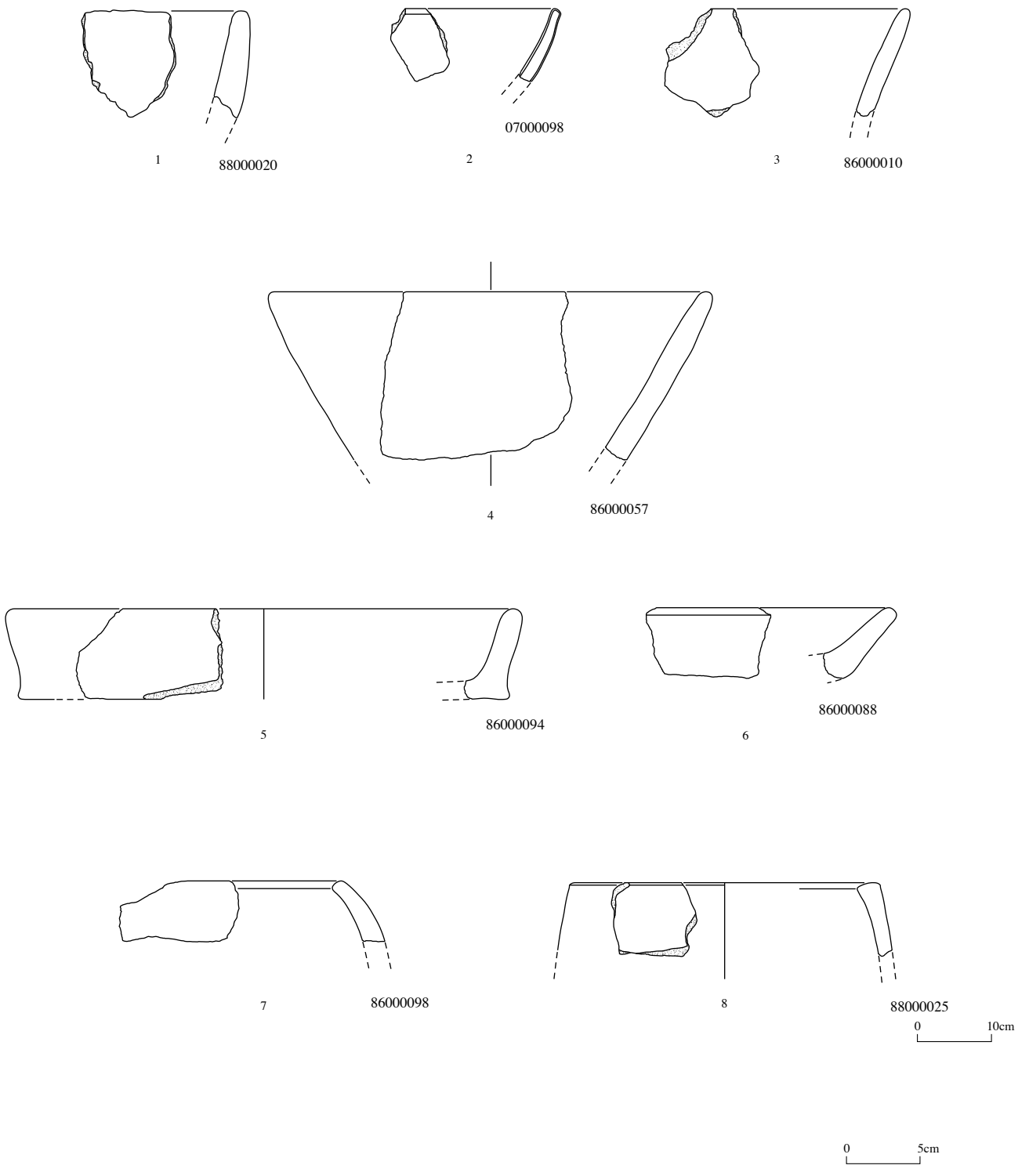

Fig. 61 Pottery shards of 3rd Millennium B.C. 1-2: Round bowls; 3-4: Conic bowls; 5-6: Basin or bowls with flat base; 7-8: Jars without neck

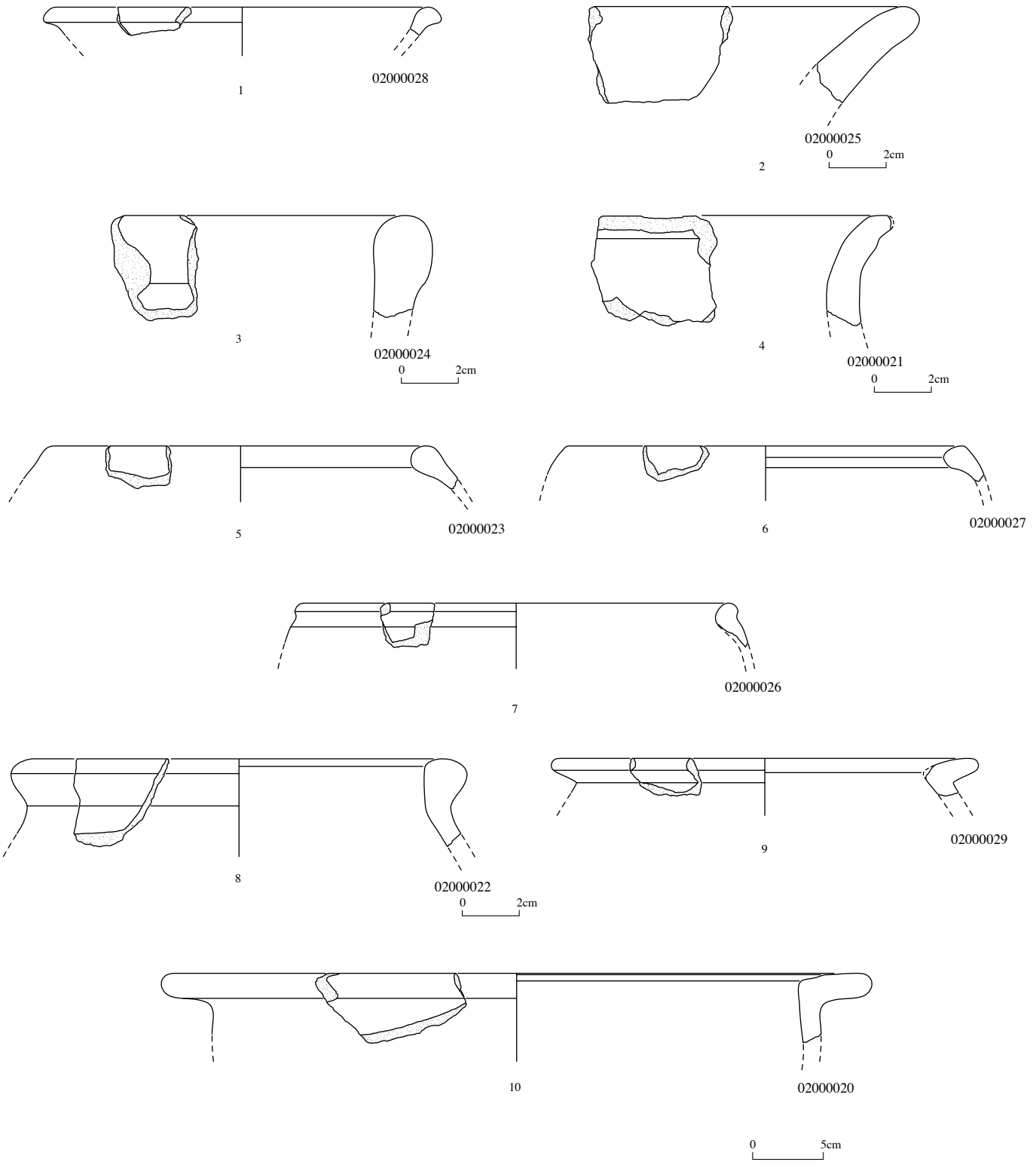

Fig. 62 Pottery shards collected in the North skirt area

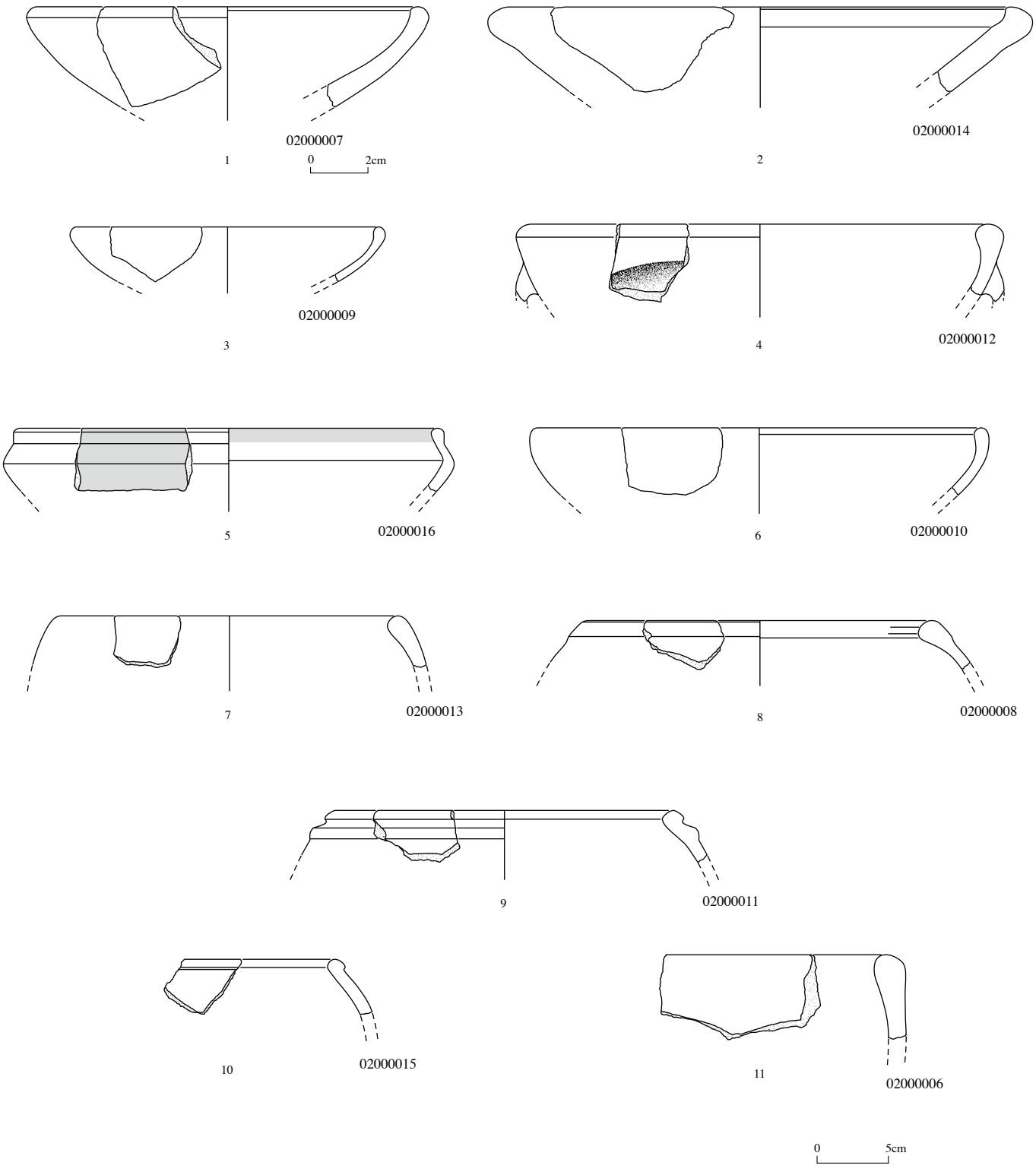

Fig. 63 Pottery shards collected in the Northwest skirt area

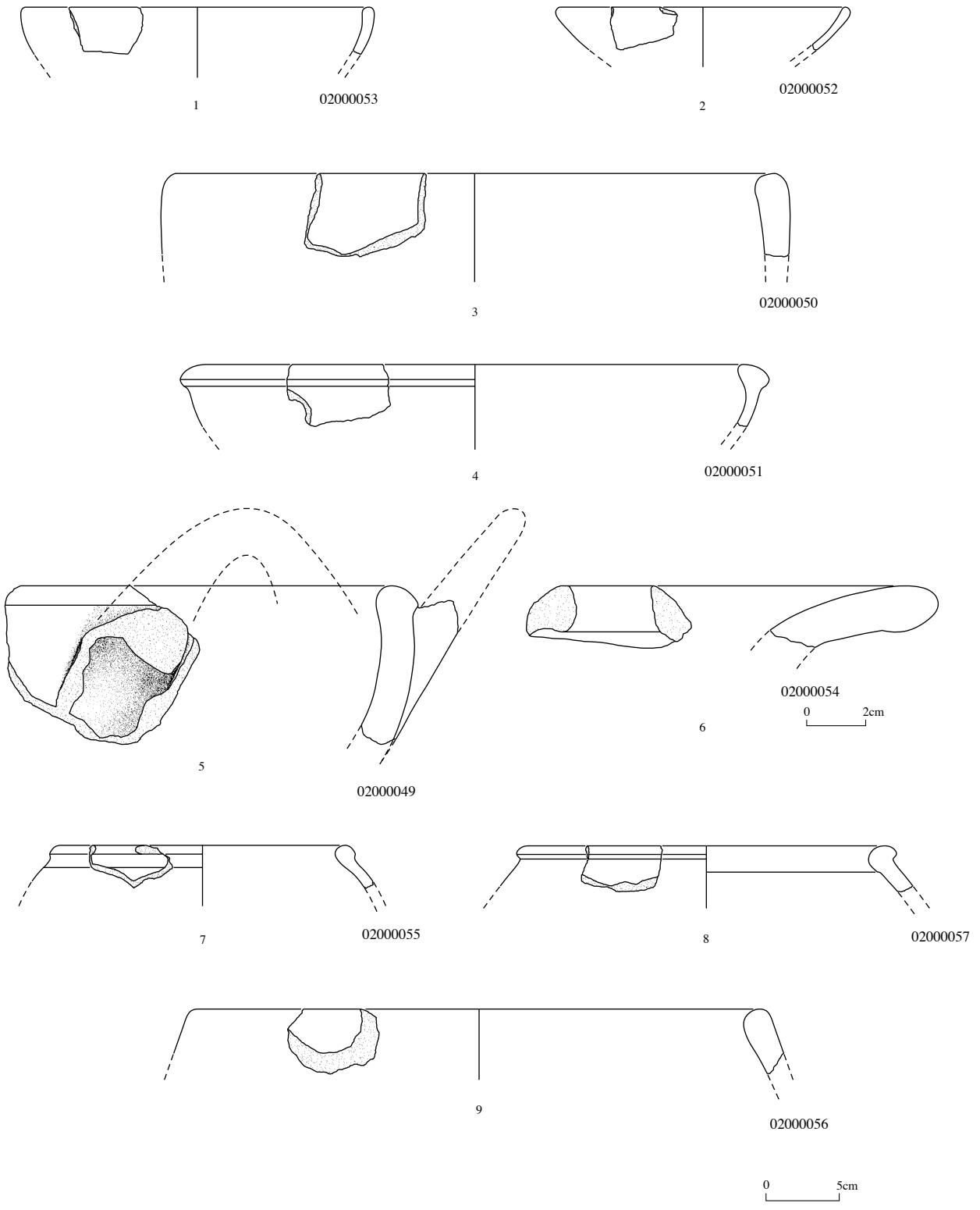

Fig. 64 Pottery shards collected in the West skirt area

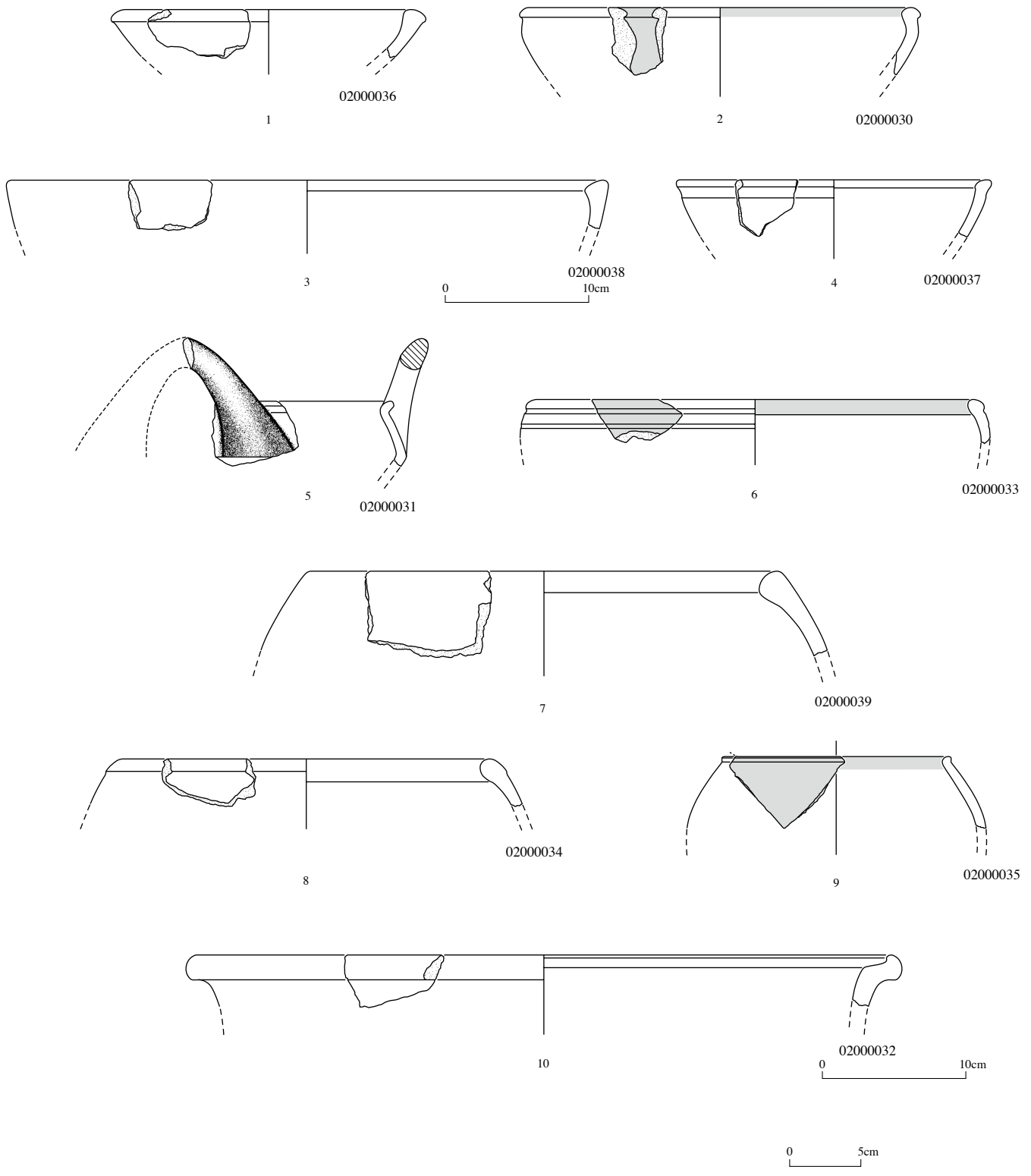

Fig. 65 Pottery shards collected in the South skirt area

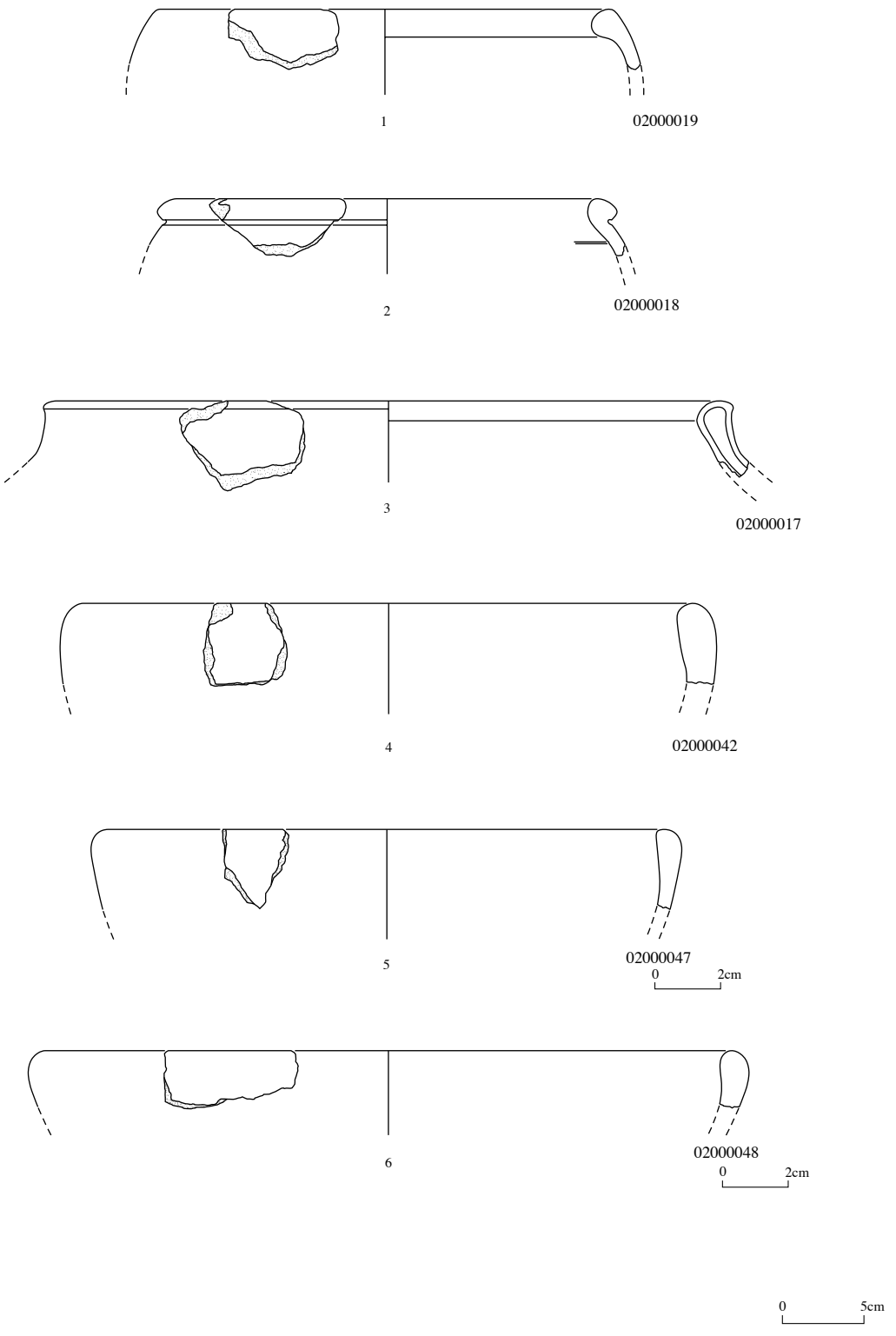

Fig. 66 1-3: Pottery shards collected in the Southeast skirt area; 4-6: Pottery shards collected in the East skirt area

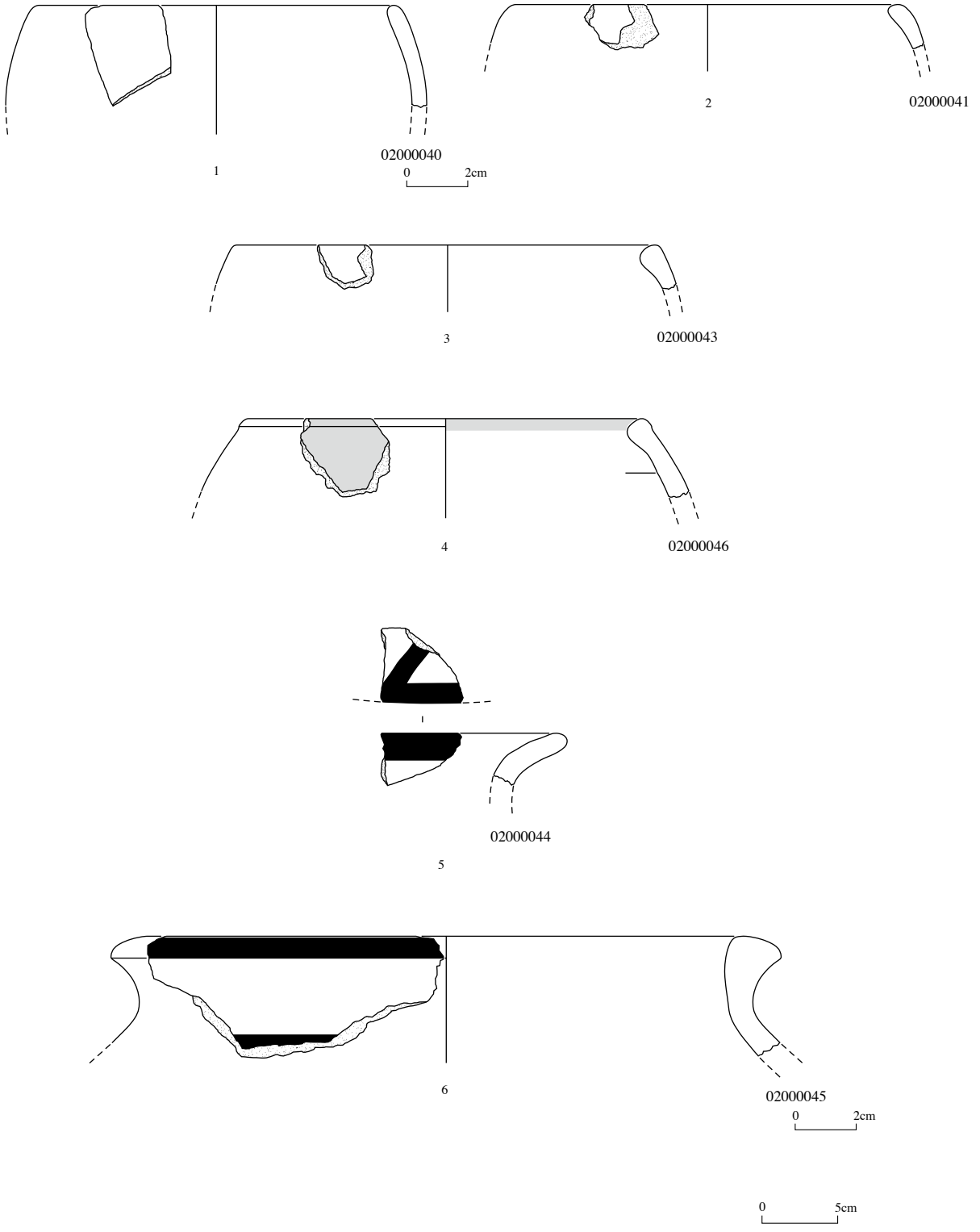

Fig. 67 Pottery shards collected in the East skirt area

Table 1 List of pottery shards collected at Yassıhöyük

	Reg. No.	Diameter	Monochrome / Painted	Form		Technique	Fabric Density	Finess	Particles	Slip	Finishing		Colour				Old Registration Number
											Outside	Inside	Outside	inside	Section	Paint	
1. Mill.B.C.	07000059	30 %5	painted	plate		wheel made	sparse	fine	lime flecks, plant	red	burnished	burnished	10R5/8	10R5/8	2,5YR6/4	N	
	07000065		painted	pot		wheel made	dens	medium	mica, plant, lime		burnished		10YR8/1	7,5YR7/3	7,5YR7/3	2,5YR6/6	
	07000068		painted	pot		wheel made	dens	very fine	lime, plant	ex	burnished		10R5/6	2,5YR6/4	2,5YR6/2	10R2/1	
	07000103	18 %8	painted	bowl		wheel made	sparse	fine	lime	rim			2,5YR5/6	2,5YR5/6	N4/0		
	07000104	10 %8	painted	bowl		wheel made	dens	fine	lime	/	burnished	burnished	10YR7/4	10YR7/4	10YR7/4	7,5R3/4	
	07000105	30 %9	painted	plate		wheel made	dens	fine	plant	ex+in	burnished	burnished	5YR6/4	5YR6/4	5YR6/4	5YR3/1	
1. Mill.B.C.	07000139	30 %7	monochrome	bowl	round	wheel made	sparse	medium fine	mica, lime	/	burnished	smoothed	2,5Y6/1	2,5YR4/2	5YR4/2		
	07000213	36 %8	monochrome	bowl	round	wheel made	dens	medium fine	mica, lime, sand	/	burnished	burnished	2,5Y6/2	7,5YR5/2	2,5Y4/1		
	07000257	22 %6	monochrome	bowl	round	wheel made	sparse	fine	mica, lime	/	smoothed	smoothed	7,5YR6/3	7,5YR6/3	7,5YR6/3		
	07000075	20 %7	monochrome	bowl	round	wheel made	sparse	fine	lime, mica	/			7,5YR7/4	7,5YR7/4	N4/0		
	07000076	28 %9	monochrome	bowl	round	wheel made	dens	coarse	mica, grit	red slip ex+in	burnished	burnished	5YR8/2	10R4/6	2,5Y5/1		
	07000116	32 %8	monochrome	bowl	round	wheel made	dens	coarse	mica, lime	/ (cream slip)	smoothed		2,5Y7/2	2,5Y7/2	10R5/6		
	07000136	18 %13	monochrome	bowl	round	wheel made	sparse	medium fine	lime	/	smoothed	smoothed	7,5YR7/2	10R5/6	10R5/6		
	07000137	32 %6	monochrome	bowl	round	wheel made	sparse	fine	lime	/	smoothed	smoothed	5YR7/4	5YR7/4	5YR7/4		
	07000149	30 %6	monochrome	bowl	round	wheel made	sparse	coarse	mica, lime	/	burnished		2,5YR5/4	5YR5/4	5YR5/4		
	07000156	30 %5	monochrome	bowl	round	wheel made	dens	medium fine	sand	ex+in	smoothed	smoothed	10YR7/3	10YR7/3	2,5YR5/6		
	07000160	30 %4	monochrome	bowl	round	wheel made	dens	coarse		ex			7,5YR6/4	7,5YR6/4	7,5YR6/4		
	07000167	18 %6	monochrome	bowl	round	wheel made	sparse	fine	mica, lime	ex+im		smoothed	N5/0	N5/0	N5/0		
	07000174	26 %8	monochrome	bowl	round	wheel made	dens	coarse	lime, sand	/	smoothed	smoothed	7,5YR5/2	10YR6/2	7,5YR6/4		
	07000187	20 %6	monochrome	bowl	round	wheel made	sparse	medium fine	mica, lime, sand	ex+in	smoothed	smoothed	7,5YR8/6	7,5YR8/6	2,5Y6/1 2,5YR5/6		
	07000223	30 %6	monochrome	bowl	round	wheel made	dens	coarse	grit, lime, mica	/	smoothed		N3/0	N3/0	2,5YR4/3		
	07000236	32 %7	monochrome	bowl	round	wheel made	sparse	fine	mica	self slipped ex			5YR6/4	5YR6/4	10YR4/1 5YR6/4		
	07000244	38 %8	monochrome	bowl	round	wheel made	dens	coarse	sand, mica	/	smoothed	smoothed	2,5YR5/4	2,5YR4/4	2,5YR5/2		
	07000247	20 %7	monochrome	bowl	round	wheel made	sparse	coarse	lime, mica	ex+in	smoothed	smoothed	10R5/6	10R5/6	10YR5/1		
	07000254	42 %8	monochrome	bowl	round	wheel made	sparse	fine	lime, mica	/	smoothed	smoothed	10YR5/1	10YR5/1	N5/0 10R5/6		
	07000255	28 %6	monochrome	bowl	round	wheel made	sparse	medium fine	sand	ex	burnished	smoothed	10R5/4	10R4/2	2,5YR5/4		
	07000256	28 %5	monochrome	bowl	round	wheel made	sparse	coarse	mica, sand	/	burnished	burnished	5YR6/4	5YR5/4	2,5YR5/4		
	07000261	30 %6	monochrome	bowl	round	wheel made	dens	coarse	sand, mica	ex+in	smoothed	smoothed	10YR7/3	7,5YR6/3	5YR4/2		
	07000286	24 %6	monochrome	bowl	round	wheel made	sparse	coarse	sand, lime	/	smoothed	smoothed	5YR3/1	5YR6/3	5YR4/2		
	07000123	60 %3	monochrome	bowl	round	wheel made	dens	very coarse	lime, sand	ex+in	burnished		2,5YR5/4	2,5YR5/4	10YR4/1		
	07000176	26 %5	monochrome	bowl	round	wheel made	sparse	fine	lime	ex+in	smoothed	smoothed	10YR7/3	10YR7/3	N4/0 10R5/6		
	07000188	22 %6	monochrome	bowl	round	wheel made	dens	medium fine	sand, mica	/	smoothed	smoothed	5Y5/1	5Y5/1	2,5YR4/3		
	07000197	30 %5	monochrome	bowl	round	wheel made	sparse	medium fine	plant, mica	/	burnished	burnished	5YR5/3	5YR5/3	5YR3/1 5YR6/4		
	07000229	26 %4	monochrome	bowl	round	wheel made	sparse	medium fine	sand	ex+in	burnished	burnished	5YR2/1	5YR2/1	5YR2/1		
	86000004	48 %7	monochrome	bowl	round	hand made	dens	very coarse	grit, lime	/			2,5YR6/4	2,5YR6/4	2,5YR5/6		Yassıн. 86-4
	07000204	32 %6	monochrome	bowl	round	wheel made	dens	medium fine	lime, sand	ex+rim	burnished	smoothed	10R2/1	5YR4/2	N5/0		
	07000218	24 %8	monochrome	bowl	round	wheel made	sparse	medium fine	lime	ex+in	burnished		5Y5/1	N3/0	N3/0		
	07000231	32 %5	monochrome	bowl	round	wheel made	sparse	medium fine	lime	ex+in	burnished	burnished	10R4/4	10R4/4	5YR4/1		
	07000233	33 %8	monochrome	bowl	round	wheel made	sparse	medium fine	plant, lime, mica	/			5YR6/4	5YR6/4	10YR4/1 5YR6/4		
	07000271	32 %10	monochrome	bowl	round	wheel made	sparse	coarse	plant, sand, mica		burnished		5YR6/4	7,5YR6/3	2,5YR6/3		
	07000115	36 %9	monochrome	bowl	round	wheel made	sparse	fine	mica	ex+in	burnished	burnished	10R5/6	10R6/6	N5/0		
	07000120	26 %7	monochrome	bowl	round	wheel made	sparse	medium fine	sand, lime, mica	ex+in			10YR6/3	7,5YR5/3	10YR6/2		
	07000126	30 %8	monochrome	bowl	round	wheel made	sparse	coarse	lime, plant	ex+in			10YR7/4	10YR8/4	2,5YR5/6		
	07000172	24 %7	monochrome	bowl	round	wheel made	sparse	medium fine	plant, lime, mica	ex			5YR5/4	5YR5/4	5YR5/4		
	07000110		monochrome	bowl	round	wheel made	sparse	medium fine	plant	ex+in	burnished	burnished	2,5YR4/8	2,5YR4/8	2,5YR6/6		
	07000111	18 %6	monochrome	bowl	round	wheel made	sparse	fine	lime, mica	/	burnished	burnished	7,5YR6/4	7,5YR6/4	N3/0 7,5YR6/4		
	07000112	22 %6	monochrome	bowl	round	wheel made	sparse	medium fine	sand, lime, mica	in	smoothed	smoothed	2,5YR7/6	7,5YR7/3	5YR5/4		
	07000157	28 %10	monochrome	bowl	round	hand made	sparse	coarse	grit, mica	/			7,5YR6/3	5YR6/4	N3/0 7,5YR6/3		
	07000127	22 %3	monochrome	bowl	with carination	wheel made	sparse	medium fine	lime	/	smoothed		2,5Y8/3	2,5Y8/3	7,5YR7/4		
	07000144	38 %7	monochrome	bowl	with carination	wheel made	dens	coarse	sand, lime, mica	/	smoothed		10YR6/3	5YR5/3	10YR5/1		
	07000239	28 %3	monochrome	bowl	with carination	wheel made	sparse	medium fine	lime, mica	/	burnished	burnished	5YR6/3	5YR6/4	2,5YR6/4		
	07000252	26 %13	monochrome	bowl	with carination	wheel made	dens	medium fine	sand, lime, mica	/	burnished	burnished	5YR5/4	5YR5/4	10R5/6		
	07000258	28 %7	monochrome	bowl	with carination	wheel made	sparse	coarse	sand, mica	/	burnished	burnished	7,5YR5/2	10YR3/1	5YR5/2		
	07000259	38 %3	monochrome	bowl	with carination	wheel made	much	medium	lime	/			5YR5/4	5YR5/4	2,5Y5/1		
	07000237	28 %8	monochrome	bowl	with carination	wheel made	sparse	medium fine	lime	/	smoothed	smoothed	10YR6/2	7,5YR6/2	2,5YR5/4		
	07000222	20 %14	monochrome	bowl	with carination	wheel made	sparse	fine	lime, mica	/			2,5YR4/4	2,5YR4/4	2,5YR4/4		
	07000224	30 %5	monochrome	bowl	with carination	wheel made	sparse	fine	sand, lime, mica	eex+in	burnished	burnished	7,5Y5/1	N5/0	N4/0		
	07000263	14 %7	monochrome	bowl	with carination	wheel made	sparse	fine	lime very few	/	smoothed	smoothed	10YR5/2	2,5Y5/2	10R4/6		
	07000124	24 %8	monochrome	bowl	with carination	wheel made	sparse	fine	lime	/	smoothed	smoothed	2,5Y7/2	2,5Y7/2	7,5YR6/3		
	07000133	30 %7	monochrome	bowl	with carination	wheel made	dens	medium fine	sand, much mica	/	smoothed		7,5YR2/1	7,5YR2/1	5YR5/3		
	07000143	26 %3	monochrome	bowl	with carination	wheel made	sparse	fine	sand	/	burnished	burnished	2,5Y3/1	N4/0	5YR5/3		
	07000169	15 %16	monochrome	bowl	with carination	wheel made	sparse	fine	lime, mica	/	smoothed	smoothed	5YR8/3	5YR5/3	N4/0 5YR5/3		
	07000241	16 %16	monochrome	bowl	with carination	wheel made	dens	fine	lime	/		burnished	5Y3/1	5Y3/1	N5/0		
	07000117	22 %9	monochrome	bowl	wih S-shped profile	wheel made	sparse	medium fine	sand, lime, mica	/			10R5/6	10R5/6	10YR5/2		
	07000138	20 %11	monochrome	bowl	wih S-shped profile	wheel made	sparse	medium fine	lime, mica	ex	smoothed		5YR5/3	2,5YR6/4	5YR5/3		

	Reg. No.	Diameter	Monochrome / Painted	Form		Technique	Fabric Density	Finess	Particles	Slip	Finishing		Colour				Old Registration Number
											Outside	Inside	Outside	inside	Section	Paint	
1. Mill.B.C.	07000159	22 %7	monochrome	bowl	wih S-shped profile	wheel made	sparse	fine	lime, mica	rim+in	smoothed	smoothed	5YR5/4	5YR5/4	5YR5/4		
	07000168	16 %11	monochrome	bowl	wih S-shped profile	wheel made	sparse	coarse	lime, mica	ex+in	smoothed		7,5R4/4	10R5/4	10YR4/1		
	07000189	30 %5	monochrome	bowl	wih S-shped profile	wheel made	sparse	coarse	grit, lime, mica	ex+in	burnished	burnished	7,5R4/4	10R5/6	2,5YR4/3		
	07000285	20 %9	monochrome	bowl	wih S-shped profile	wheel made	sparse	medium fine	plant, lime, mica	ex+in	burnished	burnished	2,5YR5/4	2,5YR5/4	5YR5/3		
	07000192	17 %3	monochrome	bowl	wih S-shped profile	wheel made	sparse	coarse	lime	ex+in			2,5Y6/4	10YR6/2	10R4/6		
	07000121	32 %7	monochrome	bowl	with straight wall	wheel made	dens	medium fine	sand, lime, mica	/			10YR5/2	7,5YR6/4	10YR5/1		
	07000131	18 %4	monochrome	bowl	with straight wall	wheel made	sparse	fine	lime	/	polished	polished	N3/0	N3/0	N4/0		
	07000145	26 %6	monochrome	bowl	with straight wall	wheel made	sparse	medium fine	sand, lime, mica	ex	burnished	smoothed	5Y5/1	N3/0	N5/0		
	07000148	14 %8	monochrome	bowl	with straight wall	wheel made	sparse	fine	lime, mica	ex+in	burnished	burnished	2,5Y6/2	2,5Y6/2	2,5YR5/4		
	07000153	16 %6	monochrome	bowl	with straight wall	wheel made	sparse	fine	lime, mica	ex+in	burnished		10YR7/3	10YR7/3	2,5YR6/4		
	07000194	12,7 %3	monochrome	bowl	with straight wall	wheel made	dens	medium fine	lime	/	smoothed	smoothed	5YR5/4	7,5YR5/3	10R5/6		
	07000211	16 %11	monochrome	bowl	with straight wall	wheel made	sparse	fine	sand, lime, mica	/		smoothed	2,5YR6/4	2,5YR5/4	2,5YR5/4		
	07000232	18 %9	monochrome	bowl	with straight wall	hand made	sparse	medium fine	sand, lime	/	smoothed	smoothed	2,5Y6/1	10YR6/2	N3/0 10YR6/2		
	07000264	32 %3	monochrome	bowl	with straight wall	wheel made	sparse	fine	plant, lime	/	burnished	burnished	7,5YR7/4	7,5YR7/4	2,5YR6/4		
	07000265	26 %5	monochrome	bowl	with straight wall	wheel made	sparse	medium fine	lime, mica	/	smoothed	smoothed	5YR6/4	5YR6/4	N5/0		
	07000276	14 %12	monochrome	bowl	with straight wall	wheel made	sparse	fine	lime	/	burnished	burnished	7,5YR5/3	7,5YR6/3	7,5YR6/3		
	07000193	16 %3	monochrome	bowl	with straight wall	wheel made	sparse	medium fine	lime, mica	/			2,5YR5/4	2,5YR5/4	N5/0 2,5YR5/4		
	07000173	30 %5	monochrome	jar	without neck	wheel made	sparse	medium fine	lime, mica	/	smoothed	smoothed	10R5/6	10R5/6	N4/0 10R5/6		
	07000287	20 %11	monochrome	jar	without neck	wheel made	sparse	medium fine	sand, lime, mica	ex		smoothed	10YR7/2	5YR5/2	2,5YR5/4		
	07000119	10 %10	monochrome	jar	without neck	wheel made	sparse	medium fine	mica, lime, grit	/			5Y2/1	7,5YR5/1	5Y2/1		
	07000135	34 %6	monochrome	jar	without neck	wheel made	dens	medium fine	sand, mica	ex		smoothed	5YR6/4	2,5YR4/4	2,5YR4/4		
	07000198	22 %9	monochrome	jar	without neck	wheel made	dens	coarse	grit	/			7,5YR5/1	7,5YR5/1	10YR4/1		
	07000200	18 %13	monochrome	jar	without neck	wheel made	sparse	coarse	grit, mica	/	smoothed	smoothed	5YR5/3	5YR6/4	10R5/4		
	07000205	22 %7	monochrome	jar	without neck	wheel made	dens	medium fine	sand, lime	/	burnished		7,5YR7/4	10YR7/2	10YR7/2		
	07000209	30 %9	monochrome	jar	without neck	wheel made	dens	coarse	sand, mica	/			10R5/4	10R5/4	10R5/4		
	07000215	18 %9	monochrome	jar	without neck	wheel made	sparse	medium fine	sand, lime	/	smoothed	smoothed	10YR6/3	10YR3/1	5YR6/1		
	07000280	20 %13	monochrome	jar	without neck	wheel made	sparse	medium fine	sand, lime	ex	burnished		5YR6/6	5YR5/3	5YR5/3		
	07000283	24 %8	monochrome	jar	without neck	wheel made	dens	coarse	sand, mica	/	smoothed		5YR6/6	2,5YR5/4	7,5YR5/2		
	07000284	16 %11	monochrome	jar	without neck	wheel made	dens	coarse	grit, lime, mica	ex+in	smoothed		10R6/6	10R5/6	5YR6/3		
	07000082	18 %6	monochrome	jar	without neck	wheel made	sparse	fine	mica	ex+rim			10YR8/2	5YR6/3	7,5YR6/2		
	07000122	22 %12	monochrome	jar	without neck	wheel made	sparse	medium fine	lime	/	burnished		7,5Y3/1	7,5Y3/1	2,5Y7/1		
	07000125		monochrome	jar	without neck	wheel made	dens	medium fine	lime, mica	/			5YR5/3	5YR6/4	5YR5/3		
	07000146	28 %5	monochrome	jar	without neck	wheel made	sparse	medium fine	lime, mica	ex+in	burnished		2,5YR7/4	7,5YR7/2	2,5YR4/3		
	07000178	2 %11	monochrome	jar	without neck	wheel made	sparse	medium fine	sand, lime, mica	ex+rim	smoothed		N5/0	N4/0	N4/0		
	07000179	20 %13	monochrome	jar	without neck	wheel made	sparse	medium fine	lime	ex+in			10YR8/3	5YR6/4	7,5Y6/1 10R5/6		
	07000199		monochrome	jar	without neck	wheel made	sparse	coarse	grit, mica	/	burnished rim		5Y6/1	N4/0	N4/0		
	07000207	30 %12	monochrome	jar	without neck	wheel made	sparse	medium fine	grit	/			2,5YR5/3	7,5YR5/3	N3/0		
	07000210	14 %16	monochrome	jar	without neck	wheel made	sparse	medium fine	lime,sand, mica	ex			7.5YR8/3	2,5YR7/4	7,5YR6/1		
	07000212	32 %7	monochrome	jar	without neck	wheel made	sparse	medium fine	sand, lime	ex	burnished		2.5YR5/6	2.5YR5/6	2,5YR5/1		
	07000260	22 %10	monochrome	jar	without neck	wheel made	sparse	fine	lime, mica	/			2,5YR6/3	2,5YR5/4	2,5YR5/4		
	07000274	18 %10	monochrome	jar	without neck	wheel made	sparse	coarse	sand, lime, mic	/	smoothed		5YR5/3	5YR5/3	5YR5/3		
	07000130	28 %18	monochrome	jar	without neck	hand made	dens	medium fine	sand, lime	/			N4/0	N4/0	N5/0		
	07000180	36 %10	monochrome	jar	without neck	wheel made	sparse	medium fine	sand, lime, mica	/			10YR7/4	5YR7/3	2,5YR5/1		
	07000190	28 %12	monochrome	jar	without neck	wheel made	sparse	fine	lime, mica	/			10YR7/4	10YR6/3	N5/0 2,5YR5/4		
	07000201	24 %15	monochrome	jar	without neck	wheel made	sparse	medium fine	grit, plant, mica	/	burnished		10R5/6	2,5YR5/6	2,5YR5/6		
	07000225	40 %10	monochrome	jar	without neck	wheel made	sparse	medium fine	sand, lime, mica	/	smoothed	smoothed	5YR6/4	5YR6/4	N5/0 5YR6/4		
	07000226	32 %7	monochrome	jar	without neck	wheel made	sparse	medium fine	sand, lime	/	burnished		7,5YR7/4	7,5YR7/4	7,5YR7/4		
	07000230	20%9	monochrome	jar	without neck	wheel made	sparse	fine	lime, mica	/			10YR8/3	7,5YR7/3	2,5YR6/4		
	07000270	66 %8	monochrome	jar	without neck	wheel made	sparse	medium fine	sand, mica	/	burnished		2,5Y8/3	5YR7/3	2,5YR5/4		
	07000273	32 %9	monochrome	jar	without neck	wheel made	sparse	medium fine	lime, mica	/			2,5Y7/2	10YR7/2	N5/0 5YR5/3		
	07000077	18 %8	monochrome	jar	without neck	wheel made	sparse	medium fine	plant, sand, lime, mica	ex+rim	burnished	burnished rim	10R4/6	2,5YR5/4	2,5YR5/4		
	07000147	12 %16	monochrome	jar	without neck	wheel made	sparse	coarse	grit, lime	ex+rim	smoothed		10YR6/3	7,5YR6/3	7,5YR6/3		
	07000214	22 %4	monochrome	jar	without neck	wheel made	dens	coarse	sand, lime, mica	/			10YR3/1	7,5YR5/3	7,5YR2/1		
	07000219	14 %11	monochrome	jar	without neck	wheel made	sparse	fine	lime, mica	/			5YR6/3	10Y6/2	5YR5/1		
	07000216	20 %13	monochrome	jar	with collar	wheel made	sparse	medium fine	sand	/	burnished	burnished rim	N3/0	N3/0	N4/0		
	07000080	14 %11	monochrome	jar	with collar	wheel made	sparse	medium fine	lime, mica	/			7,5YR7/3	7,5YR7/3	2,5YR5/4		
	07000208	26 %10	monochrome	jar	with collar	wheel made	dens	medium fine	sand, lime, mica	/	burnished	burnished rim	10YR3/1	10YR2/1	10YR2/1		
	07000272	12 %21	monochrome	jar	with collar	wheel made	sparse	medium fine	lime, mica	/			2,5Y7/2	10YR6/2	N5/0 10R5/6		
	07000281	18 %11	monochrome	jar	with collar	wheel made	sparse	fine	lime	/	burnished		10R5/6	2,5YR6/4	N5/0		
	07000282	14 %16	monochrome	jar	with collar	wheel made	sparse	coarse	grit, mica	/			10YR1.7/1	N4/0	N4/0		
	0700158	30 %6	monochrome	jar	with collar	wheel made	sparse	fine	lime, mica	/	burnished	burnished	5YR6/4	5YR6/4	2,5YR5/4		
	07000154	34 %7	monochrome	jar	with short neck	wheel made	sparse	medium fine	sand, lime	/	burnished		5YR6/4	7.5YR6/4	7,5YR7/4		
	07000177	30 %6	monochrome	jar	with short neck	wheel made	sparse	medium fine	plant, sand, lime, mica	ex+in	smoothed	smoothed	2,5YR7/6	5YR6/4	N4/0		
	07000262	38 %5	monochrome	jar	with short neck	wheel made	sparse	medium fine	plant, lime	ex	smoothed	smoothed	7,5YR7/2	5YR7/4	5YR5/3		
	07000269	30 %15	monochrome	jar	with short neck	wheel made	dens	medium fine	sand, mica	/			2,5YR5/4	2,5YR5/4	2,5YR5/4		
	07000185	38 %6	monochrome	jar	with neck	wheel made	sparse	medium fine	sand	ex+in	smoothed	smoothed	2,5Y8/3	10YR7/3	N5/0 7,5YR6/4		
	07000240	40 %5	monochrome	jar	with neck	wheel made	sparse	coarse	grit, lime, mica	/			2.5Y7/3	10YR7/3	7,5YR5/1 10R5/6		

	Reg. No.	Diameter	Monochrome / Painted	Form		Technique	Fabric Density	Finess	Particles	Slip	Finishing		Colour				Old Registration Number
											Outside	Inside	Outside	inside	Section	Paint	
1. Mill.B.C.	07000246	24 %8	monochrome	jar	with neck	wheel made	sparse	fine	sand, lime	/	burnished	burnished	10R5/6	5YR6/4	5YR6/4		
	07000132	38 %8	monochrome	jar	with neck	wheel made	sparse	medium fine	sand, lime, mica	/			7.5YR7/3	5YR6/4	7,5YR4/1 5YR6/4		
	07000155	48 %5	monochrome	jar	with neck	wheel made	sparse	medium fine	sand, lime	ex	smoothed		10YR7/3	5YR6/4	2,5YR6/4		
	07000235	44 %6	monochrome	jar	with neck	wheel made	dens	medium fine	lime	/	burnished		N3/0	N3/0	5YR5/2		
	07000245	48 %6	monochrome	jar	with neck	wheel made	sparse	very coarse	grit, lime	/			2.5Y8/3	5YR4/2	10YR5/1		
	07000251	32 %5	monochrome	jar	with neck	wheel made	sparse	medium fine	lime	/	burnished rim		7.5Yr7/4	5YR6/4	N4/0 7,5YR3/2		
	07000268	40 %10	monochrome	jar	with neck	wheel made	dens	coarse	sand, lime	/			2,5Y7/2	7,5YR6/2	7,5YR6/2		
	07000278	38 %7	monochrome	jar	with neck	wheel made	sparse	coarse	lime	/			2,5Y7/2	2,5Y6/2	2,5YR4/1 10R6/6		
	07000175	42 %10	monochrome	jar	with neck	wheel made	sparse	medium fine	lime, mica	/	burnished		10YR7/3	7,5YR7/3	N5/0 5YR6/4		
	07000227	48 %10	monochrome	jar	with neck	wheel made	sparse	medium fine	sand, lime	ex+in	burnished		10R5/6	10R5/6	5YR6/4		
	07000228	48 %10	monochrome	jar	with neck	wheel made	sparse	medium fine	sand, lime	ex+in	burnished		10R5/6	10R5/6	5YR6/4		
	07000162	46 %7	monochrome	jar	with neck	wheel made	dens	medium fine	sand, lime, mica	/	smoothed	smoothed	5YR6/4	5YR6/4	N6/0		
	07000202	54 %6	monochrome	jar	with neck	wheel made	dens	medium fine	lime	/	burnished		2,5YR6/4	10YR7/3	10YR5/1		
	07000203		monochrome	jar	with neck	wheel made	sparse	medium fine	lime	ex+in	burnished	burnished	10R5/4	10R4/6	7,5YR5/2		
	07000220	32 %7	monochrome	jar	with neck	wheel made	sparse	medium fine	lime	/	smoothed		10YR7/2	7,5YR7/4	7,5YR6/1		
	07000221	40 %9	monochrome	jar	with neck	wheel made	sparse	fine	lime, mica	ex+in	burnished		7,5YR7/4	5YR6/4	N5/0 10R5/6		
	07000243	42 %6	monochrome	jar	with neck	wheel made	sparse	medium fine	sand, plant	/	burnished		10R5/6	10R5/6	N5/0 10R5/6		
	07000248	40 %5	monochrome	jar	with neck	wheel made	sparse	medium fine	sand, plant	orange	burnished		2,5YR5/4	5YR6/4	N4/0 7,5YR5/2		
	07000267	38 %11	monochrome	jar	with neck	wheel made	dens	medium fine	sand, lime	/	burnished		10R5/4	2,5YR5/6	N4/0 2,5YR5/6		
	07000275	38 %6	monochrome	jar	with neck	wheel made	sparse	medium fine	lime	ex+in	burnished	burnished	2,5Y6/2	2,5YR6/4	N6/0 2,5YR5/4		
	07000279	54 %6	monochrome	jar	with neck	wheel made	sparse	fine	lime, mica	ex+rim	burnished	burnished rim	10YR5/2	10YR7/3	5YR6/3		
	07000114	42 %10	monochrome	Krater	with neck and pedestal	wheel made	sparse	fine	mica, lime	/	smoothed	smoothed	5YR6/3	5YR5/3	N4/0 5YR5/3	5YR6/1	
	07000129	34 %6	monochrome	Krater	with neck and pedestal	wheel made	dens	coarse	grit, lime, mica	/			10R6/8	10R5/4	2,5Y5/1		
	07000134	36 %10	monochrome	Krater	with neck and pedestal	wheel made	dens	medium fine	plant, sand, mica	ex	burnished		5YR5/3	10YR5/1	7,5YR6/1		
	07000151	42 %10	monochrome	Krater	with neck and pedestal	wheel made	sparse	medium fine	lime	grayish brown ex+in	burnished	burnished rim	5YR6/2	7,5Y6/1	10R5/6		
	07000161	30 %7	monochrome	Krater	with neck and pedestal	wheel made	dens	medium fine	grit		burnished	burnished	5Y5/1	5Y5/1	5Y5/1		
	07000163	54 %7	monochrome	Krater	with neck and pedestal	wheel made	sparse	medium fine	plant, sand, lime	/	burnished	smoothed	7,5YR7/3	7,5YR6/4	N5/0 5YR6/4		
	07000164	58 %8	monochrome	Krater	with neck and pedestal	wheel made	sparse	coarse	grit, lime, mica	ex+rim	smoothed		10R4/6	2,5YR6/4	7,5YR6/1		
	07000165	52 %4	monochrome	Krater	with neck and pedestal	wheel made	dens	medium fine	lime	/		burnished	2,5YR7/6	2,5YR6/6	7,5YR5/1		
	07000166	40 %11	monochrome	Krater	with neck and pedestal	wheel made	dens	medium fine	lime, mica	/	smoothed	smoothed	5YR6/4	7,5YR6/4	5YR5/3		
	07000181	52 %8	monochrome	Krater	with neck and pedestal	wheel made	dens	medium fine	sand, lime, mica	/		burnished	2,5YR4/4	2,5YR4/3	2,5YR3/2		
	07000183	32 %7	monochrome	Krater	with neck and pedestal	wheel made	sparse	coarse	grit, mica	/		smoothed	10YR4/1	10YR5/2	N5/0 2,5YR5/4		
	07000184	46 %8	monochrome	Krater	with neck and pedestal	wheel made	dens	coarse	sand, lime	/	smoothed		N4/0	N4/0	N6/0		
	07000186	42 %6	monochrome	Krater	with neck and pedestal	wheel made	sparse	medium fine	lime	ex+rim(double slip)	burnished	burnished	5YR7/4	5YR5/4	5YR5/4		
	07000206	56 %5	monochrome	Krater	with neck and pedestal	wheel made	sparse	medium fine	sand, mica	/	burnished		5YR7/4	10R3/3	N5/0 7,5YR7/3		
	07000217	42 %9	monochrome	Krater	with neck and pedestal	wheel made	dens	medium fine	sand, lime	/	smoothed		10Y6/1	10Y6/1	N4/0		
	07000249	48 %7	monochrome	Krater	with neck and pedestal	wheel made	dens	medium fine	sand, mica	ex+in	smoothed	smoothed	7,5YR7/4	7,5YR6/4	10R4/4		
	07000250	34 %6	monochrome	Krater	with neck and pedestal	wheel made	sparse	medium fine	sand	ex+in	burnished	burnished	5YR7/6	5YR6/4	5YR5/2		
	07000266	52 %6	monochrome	Krater	with neck and pedestal	wheel made	sparse	coarse	grit, lime	/	smoothed	smoothed	2.5YR5/4	2,5YR6/2	2,5YR5/4		
	07000277	48 %3	monochrome	Krater	with neck and pedestal	wheel made	sparse	coarse	grit, lime, mica	ex+rim	burnished		2,5Y6/2	5YR5/3	5YR5/3		
	07000118	12 %11	monochrome	jar	with narrow neck	wheel made	sparse	medium fine	lime, mica	/			7.5YR7/4	10YR7/2	2,5YR6/4		
	07000195		monochrome	jar	with narrow neck	wheel made	sparse	medium fine	plant, lime, mica	ex+rim	burnished		7,5YR6/4	7,5YR5/2	N6/0 2,5YR6/4		
	07000083	12 %12	monochrome	jar	with narrow neck	wheel made	sparse	coarse	lime, mica	ex+in	burnished		10YR7/4	10YR7/4	10YR7/4 5YR6/4		
	07000142	10 %17	monochrome	jar	with narrow neck	wheel made	sparse	medium fine	plant, lime, mica	/	smoothed	smoothed	10YR7/3	7,5YR6/3	5YR5/4		
	07000182	10 %12	monochrome	jar	with narrow neck	wheel made	sparse	medium fine	lime, mica	/			10YR7/3	10YR7/1	7,5YR6/4		
	07000191	12 %8	monochrome	jar	with narrow neck	wheel made	sparse	medium fine	lime, mica	/			7,5YR6/3	5YR6/4	10R5/6		
	07000078	15 %15	monochrome	jar	with narrow neck	wheel made	dens	medium fine	sand, mica	/			2,5YR6/4	5YR5/4	5YR5/4		
	07000079	13 %16	monochrome	jar	with narrow neck	wheel made	sparse	coarse	grit	ex+in	burnished		7,5YR8/3	2,5YR5/6	2,5YR5/6		
	07000140	12 %13	monochrome	jar	with narrow neck	wheel made	sparse	medium fine	sand, lime	/			2.5Y8/2	10YR5/2	10YR5/2		
	07000152	13 %15	monochrome	jar	with narrow neck	wheel made	sparse	fine	sand, lime	/	burnished	burnished	7,5YR3/1	10R5/6	10R5/4		
	07000238	14 %20	monochrome	jar	with narrow neck	wheel made	sparse	medium fine	sand, lime, mica	ex	burnished		10YR7/4	5YR6/3	5YR6/4		
	07000253	12 %16	monochrome	jar	with narrow neck	wheel made	dens	medium fine	sand, lime	/	burnished		10YR7/4	5YR6/4	5YR6/4		
	07000196	18 %16	monochrome	jar	with long narrow neck	wheel made	sparse	medium fine	plant, sand, lime, mica	ex	smoothed	smoothed	7,5YR6/2	2.5Y4/1	10YR2/1		
	07000074		monochrome			hand made	dens	very fine	mica	ex+in	polished	polished	10YR7/4	7.5YR8/3	N6/0		
	07000107	18 %4	monochrome	cup	with a handle	wheel made	sparse	fine	sand, mica		burnished	burnished	2,5YR5/6	2,5YR6/4	2.5YR5/2		
	07000108	22 %11	monochrome	jar	without neck	wheel made	sparse	fine	mica				5YR5/4	5YR5/4	5YR5/4		
1. Mill.B.C.	07000043		painted		fragment	wheel made	dens	medium fine	grit, lime, mica	/	painted		10YR5/1	5YR6/3	7,5YR4/4	2,5YR3/2	
	07000070		painted		fragment	wheel made	sparse	medium fine	sand	/	painted		10R4/6	2,5YR5/6	2,5YR5/6	5YR3/1	
	07000073	14 %13	painted	Achaeme-nid bowl		wheel made	sparse	fine	lime, plant	rim	burnished rim		7,5YR7/4	7,5YR7/4	7,5YR7/4		
	07000029	16	painted	jar		wheel made	dens	medium	lime, plant		painted		5YR7/3	7,5YR7/2	7,5YR7/2	7,5YR4/3	
	07000044	36 %6	painted	Krater		wheel made	dens	medium fine	lime	/ or cream slip	burnished		7,5Y7/2	2,5Y7/3	10R5/6	10YR3/2	
	07000045	44 %6	painted	Krater		wheel made	sparse	medium fine	mica, grit, lime	/			5YR6/2	5YR6/4	5YR6/4	7,5YR2/2	
	07000046	66 %5	painted	Krater		wheel made	dens	medium	lime	ex+in	painted	burnished	10R5/6	5YR8/3	2,5YR6/4	5YR2/1	
	07000048	26 %5	painted	Krater		wheel made	sparse	coarse	grit, lime, mica	orange	painted		5YR7/4	5YR7/4	5YR7/4	5YR5/2	
	07000049	54 %4	painted	Krater		wheel made	little	fine		ex+rim	burnished		5YR5/3	2,5YR6/6	2,5YR6/6	5YR2/2	

	Reg. No.	Diameter	Monochrome / Painted	Form		Technique	Fabric Density	Finess	Particles	Slip	Finishing		Colour				Old Registration Number
											Outside	Inside	Outside	inside	Section	Paint	
	07000093	26 %12	painted	bowl	with handle	wheel made	sparse	medium fine	mica, lime	ex+in	burnished	burnished	10R5/6	7,5R4/6	N5/0 2,5YR5/6	5YR2/2	
	07000094	52 %7	painted	Krater		wheel made	dens	medium fine	sand, lime, mica	ex+in	burnished	burnished	10R4/6	10R4/6	7,5YR6/2 10R4/6	N	
	07000022		painted		fragment	wheel made	dens	coarse	grit, lime	ex	burnished		5YR6/4	7.5R4/6	2.5YR7/6	5YR3/3	
	07000024		painted	handle		hand made	dens	medium fine	mica, sand, lime	ex+handle	burnished		10R5/6	10R6/4	10R5/6	10R2/2	
	07000025	32 %6	painted	bowl		wheel made	sparse	fine	plant	ex+in	burnished	burnished	10R5/6	10R5/6	2,5YR6/4 N4/0	10R4/8	
	07000026		painted		fragment	wheel made	little	medium	limes, mica	ex	burnished	burnished	2,5Y8/2	2,5YR5/2	2,5YR5/2	2,5YR4/3	
	07000028	13	painted		fragment	wheel made	much	fine		ex	painted		2,5Y8/2	2,5YR6/6	2,5YR6/6	N	
	07000030	10	painted		fragment	wheel made	sparse	medium fine	sand, lime	ex	painted		2,5Y8/2	7,5YR7/3	7,5YR7/3	5YR5/6	
	07000060	22 %5	painted	jar		wheel made	sparse	fine	lime	ex+rim	polished	polished rim	5Y8/3	2,5YR6/4	5YR7/2	10R3/6	
	07000061		painted		fragment	wheel made	dens	medium fine	sand, lime	ex+rim	painted		10R5/6	10YR7/3	10YR7/3	2,5YR2/2	
	07000062		painted		fragment	wheel made	dens	medium fine	sand, lime	ex	painted		7,5YR8/2	10R5/3	10R4/4	10R3/3	
	07000063		painted		fragment	wheel made	sparse	medium fine	mica, lime	ex	painted		5YR6/2	7,5YR7/2	5YR7/4	7,5R4/6	
	07000064		painted		fragment	wheel made	sparse	medium fine	mica, lime	ex	painted		10YR8/2	2,5YR5/1	5YR4/1	2,5YR5/6	
	07000066		painted		fragment	wheel made	dens	medium fine	lime, sand	ex	painted		2,5YR6/6	N8/0	7,5YR6/4	2,5YR3/2	
	07000067		painted		fragment	wheel made	dens	medium fine	lime	/	painted		10R5/4	10YR7/1	7,5YR4/1	N	
	07000069		painted		fragment	wheel made	dens	medium fine	lime	ex	painted		2,5Y7/1	7,5YR6/2	7,5YR7/1	5YR3/1	
	07000071		painted		fragment	wheel made	sparse	fine	lime	ex	painted		2,5Y8/2	7,5YR7/3	7,5YR7/3	5YR3/1	
	07000072		painted		fragment	wheel made	sparse	medium fine	plant, lime	ex	painted		10YR7/3	2,5YR6/6	10R5/6	N	
	07000050		painted	bowl	round	wheel made	sparse	coarse	lime, mica, plant	ex+in	smoothed	smoothed	5YR8/3	2,5Y8/3	5YR7/2	2,5YR5/2	
	07000051	24 %5	painted	bowl	round	wheel made	sparse	medium fine	lime	/	smoothed	smoothed	10YR6/3	7,5YR6/3	5YR5/3	5YR4/3	
	07000052	28 %4	painted	bowl	round	wheel made	sparse	medium fine	lime	ex+in			2,5Y8/2	2,5Y7/3	5YR6/4	2,5YR3/2	
	07000055	22 %8	painted	bowl	with-S-shped profile	wheel made	sparse	medium fine	mica, lime	ex+in			5Y7/2	5Y7/2	7,5YR4/1	5YR3/3	
	07000056	30 %9	painted	bowl	round	wheel made	sparse	fine	mica, lime	/	burnished rim		5YR6/3	2,5YR6/4	2,5YR6/4	5YR3/1	
	07000081	40 %5	painted	bowl	round	wheel made	dens	medium fine	lime	ex+in		burnished	2,5Y7/2	2,5Y7/2	2,5YR6/6	7,5YR5/3	
	07000085	24 %7	painted	bowl	round	wheel made	sparse	coarse	mica, lime, plant	/	burnished rim		10YR5/2	5YR6/3	5YR5/3	5YR3/1	
	07000086	22 %7	painted	bowl	round	wheel made	sparse	fine	mica, lime	/			10YR7/2	10YR7/2	5YR5/4	5YR5/1	
	07000087	30 %4	painted	bowl	round	wheel made	dens	coarse	lime	/	burnished		7,5YR6/.3	7,5YR5/2	N5/0 2,5YR6/4	5YR4/2	
	07000091	22 %8	painted	bowl	with-S-shped profile	wheel made	sparse	medium fine	lime, plant	/			10YR6/3	7,5YR6/3	N5/0 7,5YR6/3	7,5YR3/2	
	07000092	28 %6	painted	bowl	round	wheel made	sparse	fine	mica, lime	/	burnished	burnished	7,5YR6/4	7,5YR6/4	7,5YR6/4	5YR5/2	
	07000027		painted		fragment	wheel made	sparse	medium fine	mica, lime, plant	ex	painted		10YR7/3	2,5Y6/2	5YR6/3	7,5YR3/2	
	07000084		painted		fragment	wheel made	sparse	fine	mica, lime	ex	burnished		5YR5/4	5YR5/4	N4/0 5YR5/4		
	07000089		painted		fragment	wheel made	sparse	medium fine	lime	ex	burnished	smoothed	2,5YR6/4	7,5YR7/2	7,5YR7/2	2,5YR2/1	
	07000090		painted		fragment	wheel made	sparse	medium fine	sand, lime, mica	ex+in	burnished	burnished	5YR6/4	5YR6/4	5YR6/4	5YR3/2	
	07000023		painted	handle		hand made	dens	medium fine	sand, lime	ex	burnished		5YR6/3	5YR7/3	5YR7/3	7,5YR3/2	
	07000106	36 %4	painted	jar	without neck	wheel made	sparse	medium fine	lime, mica	ex+rim	burnished		10R4/4	10R4/4	10YR3/1	5YR3/1	
	07000109		painted	jar	without neck	wheel made	sparse	medium fine	lime, mica	ex+in			10R5/6	10R5/4	N6/0 10R5/6	5YR3/1	
	07000054		painted	cup	with a handle	hand made	dens	medium fine	mica, lime	pale orange			5YR8/4	10YR8/3	2,5YR6/4	5YR3/1	
	07000057	10 %15	painted	cup		wheel made	sparse	medium fine	lime, grit	rim	burnished	burnished	7,5YR6/4	10YR7/2	10R6/6	5YR6/1	
	07000058	12 %18	painted	cup		wheel made	sparse	medium fine	sand, mica	/	smoothed	smoothed	5YR5/4	5YR5/4	N4/0 5YR5/4	5YR4/2	
	07000088	10 %6	painted	cup		wheel made	dens	medium fine	mica, lime	/	burnished	burnished	7,5YR6/4	2,5YR5/6	7,5YR6/4	5YR5/1	
	07000047		painted	pitcher		hand made	sparse	medium	lime	ex	burnished		7,5R4/6	10R5/6	10R5/4	10R3/1	
	07000053		painted	pitcher		hand made	sparse	medium fine	sand, lime	rim	painted	painted	7,5YR7/3	10YR7/3	10YR7/3	5YR3/2	
2. Mill.B.C.	86000029	10 %7	monochrome	bowl	round	wheel made	dens	coarse	grit	red ex+in	polished		10R5/8	10R5/8	2,5YR6/6		Yassıh. 86-84
	86000041	20 %6,5	monochrome	bowl	round	wheel made	sparse	fine	plant, mica	- / -			5YR6/4	5YR6/4	5YR6/4		Yassıh. 86-107
	86000042	26 %3	monochrome	bowl	round	wheel made	sparse	fine	mica	- / -			7,5YR6/4	7,5YR6/4	7,5YR6/3		Yassıh. 86-108
	86000048	18 %5	monochrome	bowl	round	wheel made	sparse	medium	lime, mica	- / -			10YR7/3	7,5YR7/4	7,5YR7/4		Yassıh. 86-143
	86000133	18 %7	monochrome	bowl	round	wheel made	sparse	medium	lime, mica	red ex+rim			10R5/6	5YR6/6	5YR6/6		Yassıh. 86-291
	88000013	20 %7	monochrome	bowl	round	wheel made	sparse	fine	lime	- / -	tongrundig		5YR7/4	5YR7/4	N3/0 5YR6/6		Yassıh. 88-40
	86000117	14 %16	monochrome	bowl	round	wheel made	dens	fine	mica, lime	red ex+rim	burnished		2,5YR5/6	2,5YR5/4	2,5YR5/4		Yassıh. 86-261
	88000001	20 %11	monochrome	bowl/ plate		wheel made	sparse	fine	flecks	pale yellow ex+in	polished		2,5Y8/3	2,5Y8/3	2,5YR6/6		Yassıh. 88-1
	86000003	24 %10	monochrome	bowl	round	wheel made	sparse	fine	lime, mica, plant	red rim			5YR4/3	5YR4/3	N4/0		Yassıh. 86-2
	86000014	24 %12,5	monochrome	bowl	round	hand made	sparse	fine	plant	bright reddish brown upper / red	burnished rim		2,5YR5/4	2.5YR5/4	N4/0		Yassıh. 86-27
	86000081	24 %7	monochrome	bowl	round	wheel made	dens	fine	lime, mica	- / -	tongrundig		5YR6/4	5YR6/4	N4/0		Yassıh. 86-204
	88000002	9 %15	monochrome	bowl	round	wheel made	sparse	fine	lime	- / -	tongrundig		5YR7/4	5YR7/4	N2/0 5YR6/4		Yassıh. 88-4
	88000004	24 %7	monochrome	bowl	round	wheel made	sparse	medium fine		red ex upper+ rim	burnished		5YR6/4	5YR6/4	N2/0		Yassıh. 88-17
	88000011	28 %6	monochrome	bowl	round	wheel made	sparse	medium fine	lime	light gray ex+in			10YR8/3	10YR8/3	10YR7/3		Yassıh. 88-35
	00000026	32 %7	monochrome	bowl	round	wheel made	sparse	medium fine	lime	- / -	tongrundig	burnished	2,5YR5/6	2,5YR5/6	N6/0		Yassıh.00-4
	86000015	24 %9	monochrome	bowl	round	wheel made	sparse	medium fine	lime, mica	red ex upper+in			5YR7/4	10R4/8	7,5YR6/4		Yassıh. 86-32
	86000076	52 %5,2	monochrome	bowl	round	wheel made	sparse	medium fine	lime	red ex upper+in	burnished		7,5R4/6	7,5R4/6	N4/0		Yassıh. 86-199
	86000077		monochrome	bowl	round	wheel made	sparse	fine	lime, grit	dirskyred ex+rim	burnished		7,5YR4/6	5YR6/4	N4/0 5YR6/4		Yassıh. 86-200
	86000087	50 %6,5	monochrome	bowl	round	wheel made	sparse	medium fine	lime, grit	red ex+in	burnished	burnished	10R4/6	10R4/6	5YR5/4		Yassıh. 86-214
	86000096	38 %6	monochrome	bowl	round	wheel made	sparse	medium fine	lime, grit	red ex upper+in	burnished		7,5YR4/6	7,5YR4/6	N4/0 5YR6/4		Yassıh. 86-230
	86000103	36 %3	monochrome	bowl	round	wheel made	sparse	medium fine	lime, grit	red ex+in	burnished	burnished	7,5R4/6	7,5R4/6	N4/0		Yassıh. 86-238
	88000018		monochrome	bowl	round	hand made	little	coarse		redex+in	little burnished		7,5R4/6	7,5R4/6	2,5YR6/6		Yassıh. 88-46

	Reg. No.	Diameter	Monochrome / Painted	Form		Technique	Fabric Density	Finess	Particles	Slip	Finishing		Colour				Old Registration Number
											Outside	Inside	Outside	inside	Section	Paint	
2. Mill.B.C.	07000032	34 %4	monochrome	bowl	round	wheel made	sparse	medium fine	lime, mica	red ex upper + in	burnished		10R5/6	10R5/6	N4/0 5YR6/4		
	00000023	28 %5	monochrome	bowl	round	wheel made	sparse	medium fine	lime, mica	red ex+in	burnished	burnished	10R4/3	10R4/3	5YR6/6		YassıH.00-1
	86000033	28 %5	monochrome	bowl	round	wheel made	sparse	medium	lime	red ex+in			10R6/8	10R6/8	N4/0 5YR5/2		YassıH. 86-95
	86000055	50 %8	monochrome	bowl	round	wheel made	sparse	very coarse	lime, grit, plant	red rim+in	burnished	burnished	10R4/6	10R4/6	5YR7/6		YassıH. 86-166
	86000126	40%4	monochrome	bowl	round	wheel made	sparse	fine	lime	reddish brown ex+in	burnished	burnished rim	2,5YR5/3	2,5YR5/3	N4/0		YassıH. 86-277
	88000015	36 %6	monochrome	bowl	round	wheel made	little	fine					2,5YR5/6	2,5YR5/6	10YR6/4		YassıH. 88-42
	07000035	26 %5	monochrome	bowl	round	wheel made	sparse	fine	grit, mica	red ex+in	burnished	burnished rim	10R5/6	10R5/6	2,5YR6/6		
	86000006	30 %2	monochrome	bowl	round	wheel made	sparse	medium fine	lime, mica	red ex+rim	burnished		10R4/8	7,5YR7/4	N3/0 7,5YR7/4		YassıH. 86-8
	86000039	18 %9	monochrome	bowl	round	wheel made	dens	medium	mica	red ex+in	burnished	burnished	2,5YR5/8	2,5YR5/8	7,5YR6/6		YassıH. 86-105
	86000132	20 %4	monochrome	bowl	round	wheel made	sparse	fine		red ex+in upper	burnished		10R4/8	5YR7/4	N2/0 5YR6/4		YassıH. 86-289
	88000021	30 %4	monochrome	bowl	round	wheel made	sparse	medium fine	plant, grit	red ex+rim	burnished		10R5/6	5YR6/4	N2/0 7,5YR6/4		YassıH. 88-54
	07000034	25 %4	monochrome	bowl	round	wheel made	sparse	medium fine	grit, mica	red ex+ rim	burnished		7,5R4/6	5YR6/4	N4/0 5YR6/4		
	07000037		monochrome	bowl	round	hand made	dens	fine	mica, lime	red ex	burnished		7,5R4/8	2,5YR6/4	5YR6/3		
	07000128	32 %7	monochrome	bowl	round	wheel made	sparse	medium fine	lime	- / -			10R5/6	7,5YR7/2	N4/0		
	86000062	38 %9,5	monochrome	bowl	with carination	wheel made	sparse	very coarse	plant, grit	pale yellow orange ex+in	burnished		5YR7/3	5YR7/3	5YR7/3		YassıH. 86-180
	86000102	34 %6	monochrome	bowl	with carination	wheel made	sparse	medium fine	mica, plant	red rim			7,5YR5/3	7,5YR5/3	N4/0		YassıH. 86-237
	88000016	32 %4	monochrome	bowl	with carination	wheel made	dens	medium fine	lime	red ex+rim	burnished rim		10R5/6	5YR5/4	N2/0		YassıH. 88-43
	07000031	26 %16	monochrome	bowl	with carination	wheel made	dens	medium fine	mica, lime	red rim	burnished		5YR5/4	2,5YR5/4	2,5YR5/4		
	00000024	40 %5	monochrome	bowl	with S-shaped profile	wheel made	sparse	coarse	mica, lime, grid	bright reddish brown ex+in	burnished	burnished	2,5YR6/4	2,5YR4/4	2,5YR6/6		YassıH.00-2
	86000007	32 %4	monochrome	bowl	with S-shaped profile	wheel made	sparse	fine	plant, lime	red ex+in	burnished	burnished	7,5YR4/6	7,5YR4/6	N4/0 5YR6/4		YassıH. 86-11
	86000009	34 %5	monochrome	bowl	with S-shaped profile	wheel made	sparse	medium fine	grit	red / red	burnished		10R5/6	10R5/6	5YR6/6		YassıH. 86-17
	86000013	16 %9	monochrome	bowl	with S-shaped profile	wheel made	sparse	fine	lime, mica	red ex+rim	burnished		10R4/8	2,5YR6/4	N5/0		YassıH. 86-25
	86000018		monochrome	bowl	with S-shaped profile	wheel made	sparse	medium fine	lime	red ex+in upper	burnished		10R5/6	7,5YR7/4	7,5YR6/4		YassıH. 86-42
	86000019	19 %7	monochrome	bowl	with S-shaped profile	wheel made	sparse	medium fine	grid	red ex+in	burnished	burnished	10R4/8	10R4/8	7,5YR6/4		YassıH. 86-45
	86000106		monochrome	bowl	with S-shaped profile	wheel made	sparse	medium fine	lime, mica	red ex+in	burnished	burnished	10R4/8	10R4/8	N4/0 5YR6/6		YassıH. 86-242
	86000118	20 %3	monochrome	bowl	with S-shaped profile	wheel made	sparse	medium fine	lime, mica	red ex+in	burnished	burnished	10R5/6	10R5/6	2,5Y6/2 5YR6/6		YassıH. 86-262
	86000127	16 %6,5	monochrome	bowl	with S-shaped profile	wheel made	sparse	fine	lime, mica	red ex upper+rim	burnished	burnished	7,5R4/6	2,5YR6/4	N4/0		YassıH. 86-278
	86000129	14 %7	monochrome	bowl	with S-shaped profile	wheel made	sparse	medium fine	lime, grit	red ex+rim	burnished		2,5YR5/8	7,5YR7/4	N3/0		YassıH. 86-282
	88000003	22 %7	monochrome	bowl	with S-shaped profile	wheel made	sparse	medium fine	lime	red ex+rim	burnished		2,5YR6/6	7,5YR7/4	5YR7/4		YassıH. 88-8
	88000006	30 %2	monochrome	bowl	with S-shaped profile	wheel made	little	medium			slip2,5YR5/8		2,5YR5/8	7,5YR7/6	10YR6/2		YassıH. 88-22
	88000010	30 %3	monochrome	bowl	with S-shaped profile	wheel made	sparse	medium fine	lime, mica	red ex+in upper	burnished		10R5/6	7,5YR7/4	N3/0 5YR6/6		YassıH. 88-32
	86000093	38 %5	monochrome	plate	with everted rim	wheel made	sparse	fine		- / -			2,5YR5/4	2,5YR5/4	N6/0		YassıH. 86-227
	88000007		monochrome	plate	with flat bottom	hand made	dens	medium fine	mica, grit	- / -	tongrundig		2,5YR6/4	2,5YR6/6	N5/0		YassıH. 88-24
	88000023	28 %4	monochrome	jar	without neck	wheel made	dens	medium fine	grit		tongrundig		2,5YR6/6	2,5YR6/6	2,5YR6/6		YassıH. 88-61
	86000066		monochrome	jar	without neck	wheel made	sparse	fine	lime	bright reddish brown ex+rim	burnished		2,5YR6/8	5YR7/6	N5/0 5YR5/6		YassıH. 86-184
	88000024	29 %8	monochrome	jar	without neck	wheel made	sparse	very coarse	grit	- / -	tongrundig		2,5YR5/6	2,5YR5/6	N3/0 2,5YR5/6		YassıH. 88-67
	07000150	36 %5	monochrome	jar	without neck	wheel made	much	coarse	grit, plant, mica	cooking pot			5YR6/4	5YR6/4	N3/0 5YR5/4		
	86000016	22 %10	monochrome	jar	without neck	wheel made	sparse	fine	lime, mica	red / red on rim	burnished		10R4/6	5YR6/4	5YR6/4		YassıH. 86-36
	86000022	30 %11	monochrome	jar	without neck	wheel made	sparse	fine	lime, mica	red ex+rim	burnished		10R3/6	2,5YR5/4	N4/0 5YR6/4		YassıH. 86-51
	86000027	20%5	monochrome	jar	without neck	wheel made	dens	coarse	grit	- / -	tongrundig		5YR6/4	5YR6/4	5YR5/6		YassıH. 86-78
	86000037	23 %7	monochrome	jar	without neck	wheel made	sparse	fine	lime	orange ex+rim	burnished		7,5YR7/6	7,5YR7/4	7,5YR6/6		YassıH. 86-101
	86000137	24 %4	monochrome	jar	without neck	wheel made	sparse	medium fine	mica	red ex+in	burnished	burnished	10R4/8	10R4/8	7,5YR7/4		YassıH. 86-297
	88000014	28 %5	monochrome	jar	without neck	wheel made	dens	medium fine	mica, grit	- / -	tongrundig		2,5YR5/6	2,5YR5/6	2,5YR5/6		YassıH. 88-41
	07000036	20 %6	monochrome	jar	without neck	wheel made	dens	fine	mica	red ex+rim	burnished		7,5R4/6	5YR7/3	N4/0 5YR7/3		
	07000170	20 %11	monochrome	jar	without neck	wheel made	sparse	fine	mica, lime	red ex+rim			10R5/4	7,5YR7/4	2,5YR6/6		
	07000171	20 %11	monochrome	jar	without neck	wheel made	sparse	very coarse	grit, mica	- / -			10YR2/1	2,5YR5/4	2,5YR5/4		
	07000242	12 %15	monochrome	jar	without neck	wheel made	sparse	medium fine	mica	red ex+rim	burnished		7,5R4/6	10YR6/3	2,5YR4/4		
	86000072	26 %14	monochrome	jar	without neck	wheel made	sparse	medium fine	mica	red ex+rim	burnished		7,5YR6/4	7,5YR6/4	7,5YR6/4		YassıH. 86-193
	86000085	48 %6	monochrome	jar	without neck	wheel made	dens	coarse	plant	red ex + in	polished exterior and rim		7,5YR4/6	7,5YR4/6	N5/0 7,5YR6/3		YassıH. 86-211
	07000141	30 %7	monochrome	jar	without neck	wheel made	sparse	medium fine	grit	red ex+in	burnished		10R5/6	10R5/6	10R5/1 10R5/6		
	86000058	28 %7	monochrome	pithos	or large jar	wheel made	sparse	medium fine	grit	redex+rim	burnished		10R4/6	10R3/6	N4/0		YassıH. 86-171
	86000071	28 %14	monochrome	pithos	or large jar	wheel made	sparse	medium fine	sand	light gray ex+in	burnished	burnished	10YR7/2	10YR7/2	10YR6/3		YassıH. 86-190
	86000121	30 %6	monochrome	pithos	or large jar	wheel made	sparse	medium fine	grit, lime, mica	light gray ex+in			10YR7/3	10YR7/3	5YR7/4		YassıH. 86-266
	07000038	22%10	monochrome	pithos	or large jar	wheel made	sparse	fine	mica	red ex+rim	polished		7,5R4/8	2,5YR5/6	N4/0 2,5YR6/4		
	86000060	38 %11	monochrome	pithos	or large jar	wheel made	sparse	medium fine	sand, lime	bright reddish brown ex+rim	burnished		5YR7/4	5YR7/4	5YR7/4		YassıH. 86-175
	86000064	31 %14	monochrome	pithos	or large jar	wheel made	sparse	coarse	plant, mica	- / -	tongrundig		5YR5/3	5YR5/4	N4/0		YassıH. 86-182
	88000017	46 %7	monochrome	pithos	or large jar	wheel made	sparse	coarse	mica	red ex+rim	burnished		10YR7/3	10YR7/3	7,5YR6/4	10R5/6	YassıH. 88-45
	88000022	83 %4	monochrome	pithos	or large jar	wheel made	sparse	coarse	grit, lime, mica	red ex+rim	burnished		5YR6/4	5YR6/6	5YR6/4		YassıH. 88-59
	88000025	42 %7	monochrome	jar		wheel made	dens	very coarse	grit, mica	- / -			10R3/6	2,5YR5/8	2,5YR5/8		YassıH. 88-68

	Reg. No.	Diameter	Monochrome / Painted	Form		Technique	Fabric Density	Finess	Particles	Slip	Finishing		Colour				Old Registration Number
											Outside	Inside	Outside	inside	Section	Paint	
2. Mill.B.C.	07000234	60 %4	monochrome	jar		hand made	sparse	fine	plant, lime, mica	- / -			5YR7/2	5YR5/2	N3/0 2,5YR6/4		
	86000061		monochrome	pithos	beaked spout	hand made	sparse	coarse	plant, grit	red ex+rim			10R5/6	5YR6/3	5YR6/1		Yassıh. 86-177
	86000070		monochrome	pithos	beaked spout	hand made	sparse	coarse	lime	dirsky red ex	polished		10R4/6	10YR7/2	2,5YR6/4		Yassıh. 86-188
	86000074		monochrome	pithos	beaked spout	hand made	sparse	coarse	grit, mica	red ex+rim			7,5R4/8	5YR7/4	5YR7/4		Yassıh. 86-195
	07000039		monochrome	pithos	beaked spout	hand made	sparse	coarse	grit	dark red ex+rim	burnished		7,5R3/6	7,5YR6/2	N4/0		
	86000111		monochrome	pitcher	beaked spout	hand made	sparse	fine	grit, lime	bright reddish brown ex+rim	polished		2,5YR6/4	5YR7/3	5YR7/3		Yassıh. 86-247
	86000120		monochrome	pitcher	beaked spout	hand made	sparse	medium fine	lime, mica	red ex	burnished		10R6/6	5YR7/4	N5/0		Yassıh. 86-264
	86000136		monochrome	pitcher	beaked spout	hand made	sparse	fine	lime, mica	red ex+rim	burnished		7,5R4/6	2,5Y8/3	2,5YR6/4		Yassıh. 86-295
	07000040		monochrome	pitcher	beaked spout	hand made	dens	fine	mica	red ex+rim	burnished		7,5R3/6	2,5YR6/6	N3/0		
	07000041		monochrome	pitcher	beaked spout	hand made	much	fine	mica	brown ex+rim	polished		10R5/6	5YR5/3	N5/0		
	07000042		monochrome	pitcher	beaked spout	hand made	dens	fine	sand, mica	red ex+in faded			5YR6/6	5YR6/6	N6/0		
	86000045		monochrome	teapot	spout	hand made	sparse	fine	lime, mica	- / -	tongrundig		7,5YR5/6	7,5YR5/8	10YR7/4		Yassıh. 86-134
	88000005		monochrome	teapot	spout	hand made	dens	fine	lime	- / -	tongrundig		5YR6/3	5YR6/3	5YR6/3		Yassıh. 88-20
	86000090		monochrome	lim		hand made	little	medium	limestone tempered				10YR6/2	7,5YR6/6	N4/0		Yassıh. 86-219
	88000012	20 %7	monochrome	lim	handle	hand made	sparse	medium fine	plant, lime, mica	orange ex	finger stamps		10YR7/3	10YR7/3	5YR7/4		Yassıh. 88-39
	86000075	22 %14	monochrome	stand		hand made	medium	medium fine	plant	red ex + in	polished		10R4/8	10R4/8	N6/0		Yassıh. 86-197
	86000116	10 %11	monochrome	stand		wheel made	sparse	medium fine	mica	- / -	tongrundig		7,5YR6/4	7,5YR6/4	7,5YR6/4		Yassıh. 86-258
3. Mill.B.C.	86000080	30 %5	monochrome	bowl	with slightly shaped rim	hand made	sparse	medium fine	plant	red ex. + in	polished		7,5YR6/3	7,5YR6/3	5YR7/6		Yassıh. 86-203
	86000084		monochrome	bowl	with slightly shaped rim	hand made	sparse	medium fine	plant, grit, lime	red ex + in			10R4/6	10R4/6	5YR7/4		Yassıh. 86-210
	86000097	28 %8	monochrome	bowl	with slightly shaped rim	hand made	medium	medium fine	plant, lime	red ex + upper in			7,5R3/6	7,5YR6/4	7,5YR6/4		Yassıh. 86-231
	86000131	22 %6	monochrome	bowl	with slightly shaped rim	hand made	sparse	medium fine	lime, grit	red ex + in	polished	polished rim	10R3/6	10R3/6	N5/0 5YR6/4		Yassıh. 86-288
	88000019		monochrome	bowl	with slightly shaped rim	hand made	sparse	medium fine	lime, grit	- / -			2,5YR6/8	2,5YR5/6	N5/0 7,5YR6/2		Yassıh. 88-48
	07000033		monochrome	bowl	with slightly shaped rim	hand made	sparse	coarse	plant, lime, grit, ,mica	red ex + in	burnished rim		10R5/6	10R5/6	N4/0 10R5/6		
	07000096		monochrome	bowl	with slightly shaped rim	hand made	dens	very coarse	lime, grit	- / -		burnished	2,5YR4/3	5YR5/2	5YR4/2		
	07000100		monochrome	bowl	with slightly shaped rim	hand made	dens	course	plant, grit	dark reddish brown ex	polished		7,5YR4/2	7,5YR3/1	7,5YR3/1		
	86000057	30 %12	monochrome	bowl	without shaped rim	hand made	sparse	very coarse	plant, grit, mica	red upper ex + in			7,5YR6/3	5YR5/4	7,5YR5/2		Yassıh. 86-170
	86000010		monochrome	bowl	without shaped rim	hand made	dens	very coarse	mica	red ex	polished		10R4/8	10R4/8	5YR6/4		Yassıh. 86-19
	86000110	18 %3	monochrome	bowl	without shaped rim	wheel made	sparse	coarse	plant, lime	red ex + rim	burnished	burnished rim	10R5/6	10R6/6	10R5/6		Yassıh. 86-246
	86000123	20 %3	monochrome	bowl	without shaped rim	hand made	sparse	medium fine	plant	reddishbrown / red	burnished	burnished	7,5YR6/4	5YR5/4	N5/0		Yassıh. 86-268
	88000020		monochrome	bowl	without shaped rim	hand made	much	coarse	plant, grit			burnished	5YR5/4	5YR5/4	N4/0		Yassıh. 88-49
	07000095		monochrome	bowl	without shaped rim	hand made	little	medium fine	lime	red ex+ in almost faded			10R4/6	10R4/6	N5/0 2,5YR6/4		
	07000098		monochrome	bowl	without shaped rim	hand made	dens	very coarse	plant, sand	red ex+in	polished		10R4/6	10R4/6	N3/0		
	07000101		monochrome	bowl	without shaped rim	hand made	sparse	medium fine	plant, lime	red in	burnished	burnished	2,5YR6/4	10R4/6	10R5/6		
	86000088		monochrome	basin	without shaped rim	hand made	dens	coarse	plant, grit, lime	- / -			7,5YR6/4	7,5YR6/3	7,5YR5/1		Yassıh. 86-215
	86000094	35 %6	monochrome	basin	without shaped rim	hand made	dens	coarse	plant, sand	-/-	-/-		7,5YR5/3	5YR5/4	7,5YR4/3		Yassıh. 86-228
	86000098		monochrome	jar	without neck	hand made	sparse	medium	plant, lime, mica, grit	red ex + in			2,5YR6/4	7,5YR6/3	5YR6/4		Yassıh. 86-232
	86000078	34 %8	monochrome	jar	with short neck	hand made	little	medium fine	plant	red ex			2,5YR5/4	7,5YR6/3	N5/0		Yassıh. 86-201
	07000097	24 %4	monochrome	jar	with short neck	hand made	sparse	medium fine	plant, lime, grit	- / -	polished rim		10R4/6	10R5/6	N4/0 10R5/6		
	00000038	20 %5	monochrome			wheel made	little	medium	gold mica				10R6/6	10R6/6	2,5YR6/3		Yassıh.00-29
	86000036	27 %5	monochrome			wheel made	sparse	very coarse					2,5YR6/6	2,5YR6/6	2,5YR6/6		Yassıh. 86-100
	88000008	28 %7	monochrome			wheel made	much	coarse	plant, lime	- / -			5YR5/3	2,5YR5/3	N4/0 2,5YR5/4		Yassıh. 88-29

Table 2 List of pottery shards collected around Yassıhöyük

		Reg. No.	Diameter	Monochrome / Painted	Form		Technique	Fabric			Slip	Finishing		Colour				Remarks
								Density	Finess	Particles		Outside	Inside	Outside	inside	Section	Paint	
North	1.Millen.B.C.	02000029	30 %4	monochrome	jar	without neck	Wheel made	dens	coarse	sand, lime	ex+in			7,5YR6/4	7,5YR6/4	2,5YR5/6		YassıH.Kuzey02-16
area	2.Millen.B.C.	02000020	50 %6	monochrome	pithos		Wheel made	sparse	coarse	mica, lime	ex+rim			2,5YR6/6	2,5YR6/6	10YR5/1		YassıH.Kuzey02-02
		02000021		monochrome	jat	wih neck	Wheel made	sparse	medium fine	plant, sand, mica	/	smoothed	smoothed	7,5YR7/4	7,5YR7/4	7,5YR6/4		YassıH.Kuzey02-06
		02000022	16 %5	monochrome	jar	without neck	Wheel made	sparse	medium fine	sand, lime, mica	/			5YR6/4	10YR6/2	N6/0		YassıH.Kuzey02-07
		02000023	24 %5	monochrome	jar	without neck	Wheel made	sparse	coarse	sand, lime	/			5YR6/4	5YR6/4	5YR6/4		YassıH.Kuzey02-08
		02000024		monochrome	jar	with neck	Wheel made	dens	coarse	sand, lime	/			5YR6/4	5YR6/4	5YR6/4		YassıH.Kuzey02-09
		02000025		monochrome	bowl		Hand made	sparse	coarse	plant sand, mica	/			2,5YR6/4	2,5YR6/4	2,5YR6/4		YassıH.Kuzey02-11
		02000026	28 %4	monochrome	jar	without neck	Wheel made	sparse	medium fine	sand, lime	/			7,5YR6/4	7,5YR6/4	7,5YR6/4		YassıH.Kuzey02-13
		02000027	25 %4	monochrome	jar	without neck	Wheel made	dens	coarse	lime	ex+in faded			5YR6/4	2,5YR5/4	2,5YR6/4		YassıH.Kuzey02-14
		02000028	28 %4	monochrome	bowl	with straigt profile	Wheel made	sparse	fine	lime	ex+in	burnished		2,5YR5/6	2,5YR5/6	10YR5/2		YassıH.Kuzey02-15
Northwest	1.Millen.B.C.	02000014	38 %11	monochrome	bowl	with straigt wall	Wheel made	sparse	medium fine	sand, lime, mica	/			5YR6/4	5YR7/6	5YR7/6		YassıH.Kuzey Batı02-39
area	2.Millen.B.C.	02000006		monochrome	bowl		Wheel made	dens	coarse	sand, lime	/			10YR6/1	10YR6/1	N4/0		YassıH.Kuzey Batı02-01
		02000007	14 %6	monochrome	bowl		Wheel made	sparse	medium fine	plant, lime	/			7,5YR7/4	7,5YR7/4	10YR6/1		YassıH.Kuzey Batı02-18
		02000008	22 %6	monochrome	jar	without neck	Wheel made	sparse	medium fine	lime	/			5YR6/4	5YR6/4	10YR6/1		YassıH.Kuzey Batı02-20
		02000009	22 %9	monochrome	bowl	round	Wheel made	sparse	fine	lime	/			2,5YR6/4	2,5YR6/4	2,5YR6/4		YassıH.Kuzey Batı02-24
		02000010	32 %7	monochrome	bowl	round	Wheel made	sparse	medium fine	plant, lime	/			10YR8/3	10YR8/3	7,5YR7/3		YassıH.Kuzey Batı02-27
		02000011	22 %7	monochrome	jar	without neck	Wheel made	sparse	medium fine	plant	/			5YR7/4	5YR7/4	5YR6/1		YassıH.Kuzey Batı02-28
		02000012	34 %4	monochrome	bowl	with handles	Wheel made	sparse	medium fine	lime, plant	ex+rim			7,5YR7/4	7,5YR7/4	2,5Y5/1		YassıH.Kuzey Batı02-31
		02000013	22 %4	monochrome	jar	without neck	Wheel made	dens	coarse	sand, lime	/			7,5YR6/3	7,5YR6/3	10YR7/2		YassıH.Kuzey Batı02-37
		02000015		monochrome	jar	without neck	Wheel made	little	medium	lime	ex+in		burnished	5YR7/4	5YR7/4	5YR6/1		YassıH.Kuzey Batı02-43
		02000016	30 %8	monochrome	bowl	with knickwand	Wheel made	sparse	coarse	plant, lime	ex+rim			10R6/6	7,5YR7/4	10YR8/1		YassıH.Kuzey Batı02-44
West	1.Millen.B.C.	02000051	38 %5	monochrome	bowl	round	Wheel made	sparse	medium fine	lime	/			5YR6/4	5YR6/4	10YR5/1		YassıH.Batı02-09
area	2.Millen.B.C.	02000049		monochrome	bowl	with triangle handles	Wheel made	sparse	medium fine	sand, lime	ex+in	burnished		7,5R3/4	10R6/6	5YR6/4		YassıH.Batı02-04
		02000050	38 %5	monochrome	bowl		Wheel made	dens	very coarse	grit	/			5YR6/4	5YR6/4	N2/0		YassıH.Batı02-06
		02000052	20 %5	monochrome	bowl	round	Wheel made	sparse	fine	plant, mica	/			10YR7/1	10YR7/1	10YR7/1		YassıH.Batı02-10
		02000053	24 %6	monochrome	bowl	round	Wheel made	sparse	medium fine	lime, mica	/			2,5YR6/6	2,5YR6/6	5YR7/1		YassıH.Batı02-12
		02000054		monochrome	jar	with everted rim	Wheel made	sparse	medium fine	plant, lime	ex+rim			7,5YR3/4	7,5YR3/4	2,5Y7/1		YassıH.Batı02-13
		02000055	18 %7	monochrome	jar	without neck	Wheel made	sparse	coarse	lime, sand	/			2,5YR6/6	5YR5/2	7,5YR6/1		YassıH.Batı02-15
		02000056	36 %4	monochrome	jar	without neck	Wheel made	dens	coarse	sand, lime	/			5YR5/2	2,5YR6/6	7,5YR7/2		YassıH.Batı02-18
		02000057	22 %6	monochrome	jar	without neck	Wheel made	dens	medium	sand, lime	/			5YR6/6	5YR6/6	10YR7/1		YassıH.Batı02-20
South	1.Millen.B.C.	02000032	50 %4	monochrome	Krater	with neck and pedestal	Wheel made	dens	medium fine	mica, lime, sand	/			2,5Y5/1	2,5Y5/1	N5/0		YassıH.Güney02-35
area	2.Millen.B.C.	02000030	28 %5	monochrome	bowl	round	Wheel made	sparse	very fine	mica	ex+rim	polished	burnished	7,5R4/6	7,5YR7/4	7,5YR7/4		YassıH.Güney02-22
		02000031		monochrome	bowl	with triangle handles	Wheel made	sparse	fine	mica, lime	ex	burnished		10R4/6	2,5YR6/6	2,5YR6/6		YassıH.Güney02-26
		02000033	32 %6	monochrome	bowl	round	Wheel made	dens	fine	mica, lime	ex+rim	burnished	burnished rim	7,5YR4/6	5YR6/4	7,5YR6/3		YassıH.Güney02-36
		02000034	28 %7	monochrome	jar	without neck	Wheel made	dens	coarse	sand, lime, mica	/ selfslip			5YR6/4	5YR6/4	N3/0		YassıH.Güney02-46
		02000035	16 %17	monochrome	jar	without neck	Wheel made	sparse	coarse	ggrit, lime, mica	ex+rim (partially)	burnished		10R4/8	10YR6/3	10YR6/3		YassıH.Güney02-55
		02000036	22 %10	monochrome	bowl	round	Wheel made	dens	medium fine	sand, lime, mica	ex+in faded			7,5R4/6	7,5R4/6	N5/0		YassıH.Güney02-62
		02000037	44 %6	monochrome	bowl	round	Wheel made	dens	medium fine	grit, lime, mica	in			5YR6/4	7,5YR4/6	5YR4/1		YassıH.Güney02-66
		02000038	42 %4	monochrome	bowl	round	Wheel made	sparse	medium fine	mica, lime	ex+in	burnished	burnished	5YR4/2	10R4/6	N3/0		YassıH.Güney02-71
		02000039	33 %8	monochrome	jar	without neck	Wheel made	sparse	very coarse	grit, lime, mica	/	smoothed	smoothed	7,5YR4/2	7,5YR4/2	5YR4/2		YassıH.Güney02-75
Southeast	2.Millen.B.C.	02000017	42 %6	monochrome	jar	with collor	Wheel made	sparse	medium fine	mica, lime	ex+in	burnished	burnished	10R4/8	10R4/8	5YR6/4 N2/0		YassıH.Güney Doğu02-02
area		02000018	28 %10	monochrome	jar	without neck	Wheel made	sparse	fine	mica, lime	/			10R5/6	2,5YR6/4	5YR5/1		YassıH.Güney Doğu02-03
		02000019	28 %7	monochrome	jar	without neck	Wheel made	sparse	medium fine	sand, lime	/			7,5R3/4	10R6/6	5YR6/4		YassıH.Güney Doğu02-04
		02000058		monochrome			Hand made	sparse	fine	lime	ex+rim	burnished		10R4/8	2,5YR6/6	2,5YR5/1		YassıH.Güney Doğu02-12
East	1.Millen.B.C.	02000045	22 %15	painted	jar	with collor	Wheel made	sparse	medium fine	mica, lime	/			5YR6/4	5YR6/4	2,5YR6/6	2,5YR4/6(10R2/2)	YassıH.Doğu02-10
area	2.Millen.B.C.	02000040	12 %7	monochrome	bowl	round	Wheel made	sparse	medium fine	lime, mica	/		burnished	5YR7/4	5YR6/4	5YR6/4		YassıH.Doğu02-02
		02000041	26 %5	monochrome	bowl	round	Wheel made	dens	coarse	mica, lime, grit	/			5YR6/4	5YR6/4	5YR5/4		YassıH.Doğu02-04
		02000042	40 %3	monochrome	bowl	round	Wheel made	dens	coarse	grit	/	smoothed		5YR6/4	5YR6/4	5YR4/4		YassıH.Doğu02-05
		02000043	28 %4	monochrome	bowl	round	Wheel made	dens	coarse	mica, sand	/			2,5YR6/4	2,5YR6/4	2,5YR5/4		YassıH.Doğu02-07
		02000044		monochrome	jar	with neck	Wheel made	sparse	medium fine	mica, lime	ex+rim			5YR6/4	5YR6/4	5YR6/4		YassıH.Doğu02-08
		02000045	22 %15	painted	jar	with collor	Wheel made	sparse	medium fine	mica, lime	/			5YR6/4	5YR6/4	2,5YR6/6	2,5YR4/6(10R2/2)	YassıH.Doğu02-10
		02000046	27 %5	monochrome	jar	without neck	Wheel made	dens	very coarse	grit	ex			5YR5/4	10YR6/2	5YR6/4		YassıH.Doğu02-11
		02000047	18 %3	monochrome	bowl	round	Wheel made	sparse	fine	mica	/			5YR6/4	2,5YR6/6	10YR5/1		YassıH.Doğu02-13
		02000048	22 %6	monochrome	bowl	round	Wheel made	sparse	fine	mica, lime	/			5YR6/4	10YR6/3	10YR6/2		YassıH.Doğu02-14